PENTAIR

DELTA ENVIRONMENTAL®

D2C20-23

2 HP SUBMERSIBLE GRINDER PUMP

WWW.DELTAENVIRONMENTAL.COM

DELTA ENVIRONMENTAL® D2C20-23
2 HP Submersible Grinder Pump

The Changing Force in Pressure Sewer

The reliable D2C20-23 2 hp submersible grinder pump offering by Delta Environmental is designed specifically for use in pressure sewer applications with long discharge runs or high static heads. It features an innovative hardened cutter mechanism and recessed impeller design to effectively macerate typical domestic sewage solids into a fine slurry. As the world evolves from concrete septic tanks and large piping gravity collection systems to more innovative wastewater solutions, the use of submersible grinder pumps in Low Pressure Sewer (LPS) systems for the residential developer applications has proven to be a superior Delta Environmental solution that is cost effective and minimally disruptive to the natural environment. The D2C20-23 Series can be installed in a variety of packaged systems. Factory-assembled simplex or duplex packages with guide rail systems or free-standing systems are available. Delta Environmental also has complete turnkey systems to make selection simple. Individual rail components are also available for installation in on-site concrete systems. For additional information, please contact your local Delta Environmental representative.

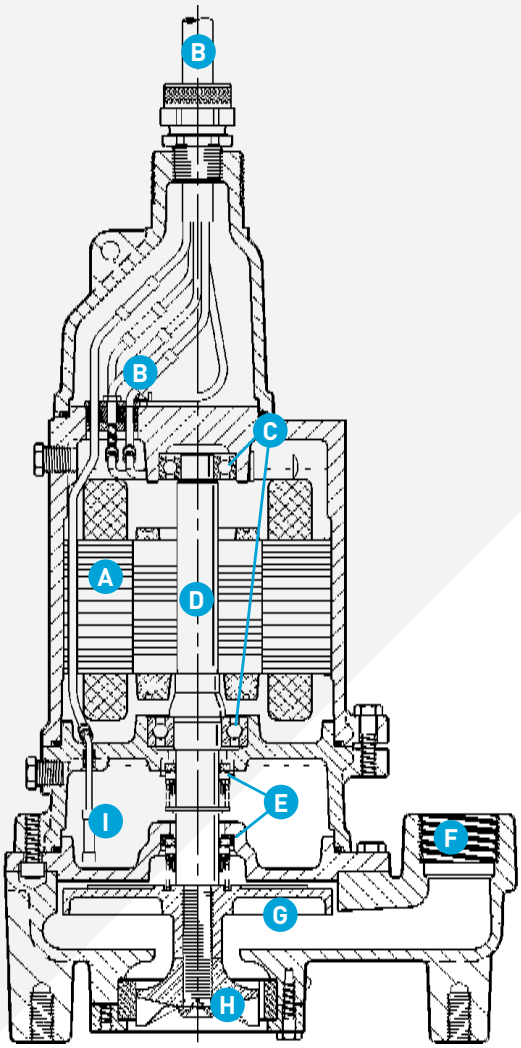

A. Powerful Motor
2 hp, 3450 RPM, 3 phase. Press fit for perfect alignment and best heat transfer. Oil-filled motor conducts heat and lubricates bearings. Class F VFD/continuous duty rated.

B. Cable Entry System
Provides double seal protection. Cable jacket sealed by compression fitting. Individual wires sealed by compression grommet. Power cord can be replaced without disturbing motor.

C. Ball Bearings
Upper and lower ball bearings support shaft and rotor and take axial and radial loads.

D. Heavy 416 SST Shaft
Corrosion resistant. Reduces shaft deflection due to grinding loads.

E. Shaft Seals
Double tandem mechanical shaft seals protect motor. Oil-filled seal chamber provides continuous lubrication.

F. Volute Case
Cast iron 1-1/4" NPT vertical flanged discharge.

G. Impeller
Cast iron recessed impeller handles ground slurry without clogging or binding. Provides unobstructed flow passage. Reduces radial loads. Pump-out vanes help keep trash from seal, reduces pressure at seal faces.

H. Grinder Assembly
Grinder impeller and shredding ring are replaceable without dismantling pump. Constructed of 440 SST hardened to 56–60 Rockwell.

I. Seal Leak Probe (Opt.)
Detects water in seal housing, activates warning light in control panel.

Pump Details

Pump Performance

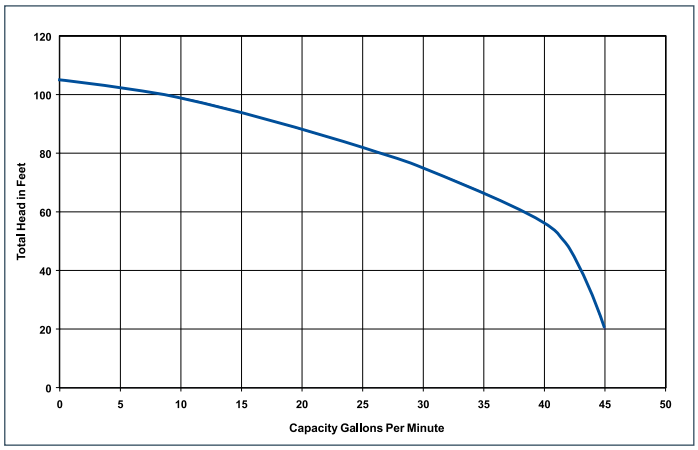

Pump Capabilities			
Liquids handling		Domestic raw sewage	
Intermittent liquid temp.		Up to 140° f	Up to 60° c
Winding insulation temp. (Class F)		311°F	155°C
Motor electrical data		2 hp, 3450 RPM, 3 ph - induction run, 230 volt; 60 Hz	
Acceptable pH range		6 - 9	
Specific gravity		.9 - 1.1	
Viscosity		28 - 35 SSU	
Discharge, NPT		1¼ in.	
Min. sump diameter	Simplex	24 in.	61.0 cm
	Duplex	36 in.	91.4 cm

Note: Consult factory for applications outside of these recommendations.
* Models with third party approval(s) are clearly marked on individual pump nameplates.

Construction Materials		
Motor housing, seal housing, cord cap, volute case, recessed impeller		Cast iron, Class 30, ASTM A48
Power cord	w/seal probe	20' 14/5 SOOW
	w/o seal probe	20' 14/4 SOOW
Mechanical seals		Double tandem carbon & ceramic
Pump, motor shaft		416 SST
Fasteners		300 Series SST
Shredding ring, grinder impeller		440 SST, 58–60 Rockwell

Pump Dimensions

[Dimensions in MM]

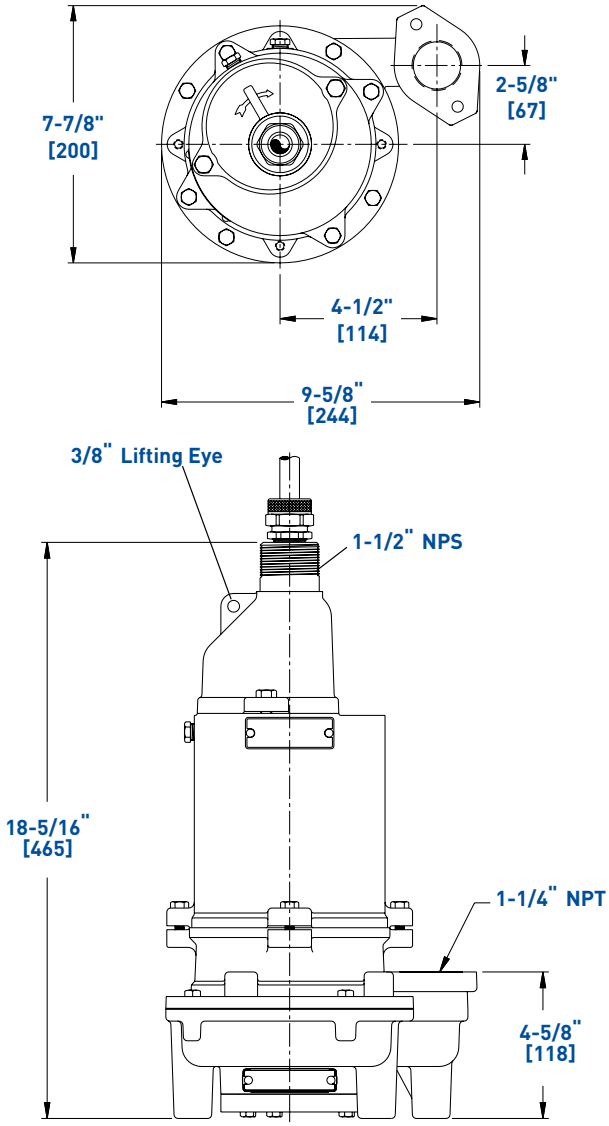

Pump Nameplate

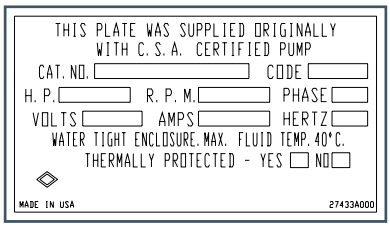

Available Models	Motor Electrical Data										
Hazardous Location	HP	Volts	Phase	Hertz	Start Amps	Run Amps	Run kW	Start KVA	Run KVA	Code Letter	NEC Service Factor
D2C20-23	2	230	3	60	27.5	8.4	2.9	11.0	3.3	F	1.25

Installation Details

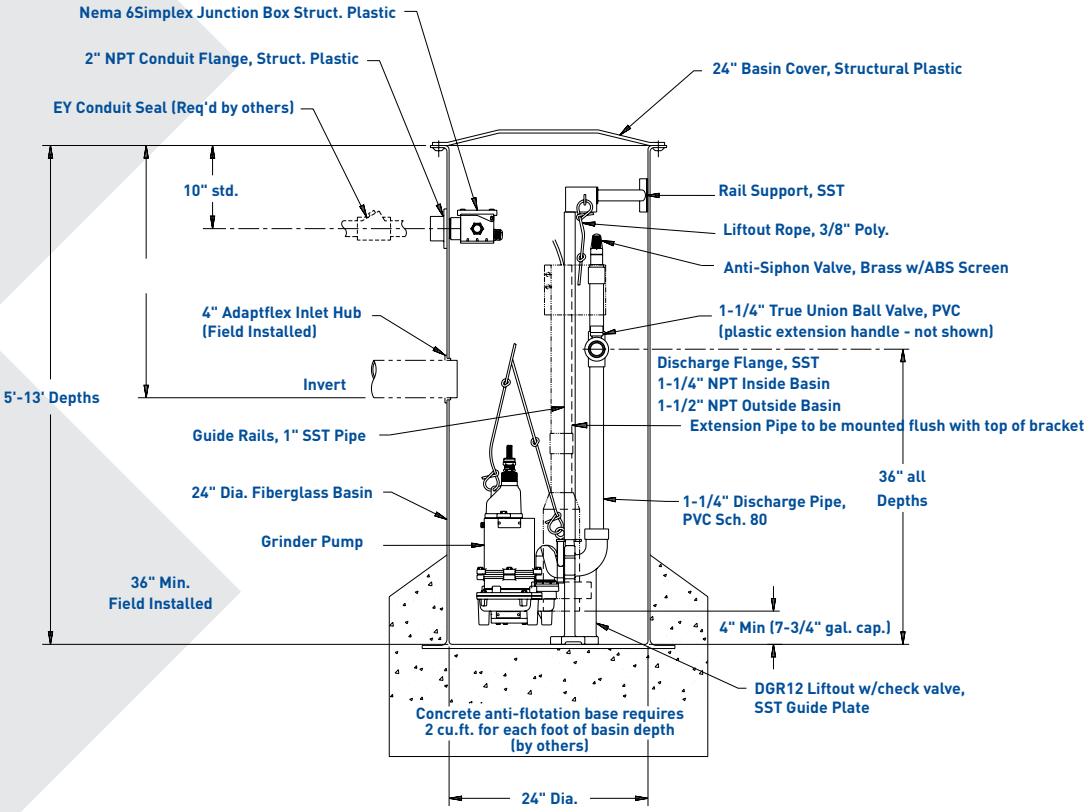

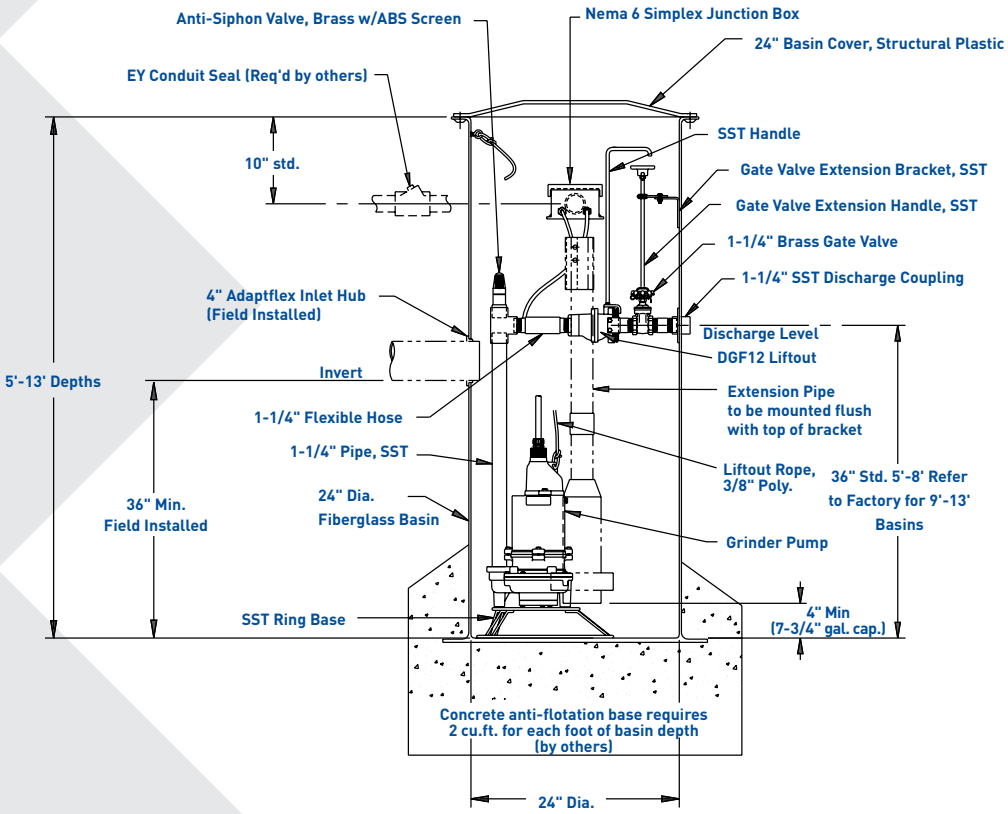

PENTAIR

8263 FLORIDA BLVD., DENHAM SPRINGS, LA 70727, 225-665-6162, 1 (800) 219-9183 | WWW.DELTAENVIRONMENTAL.COM

Because we are continuously improving our products and services, Pentair reserves the right to change specifications without prior notice.
K4353 08/21/13 © 2013 Pentair Ltd. All Rights Reserved.