PENTAIR

MYERS® APLEX SERIES

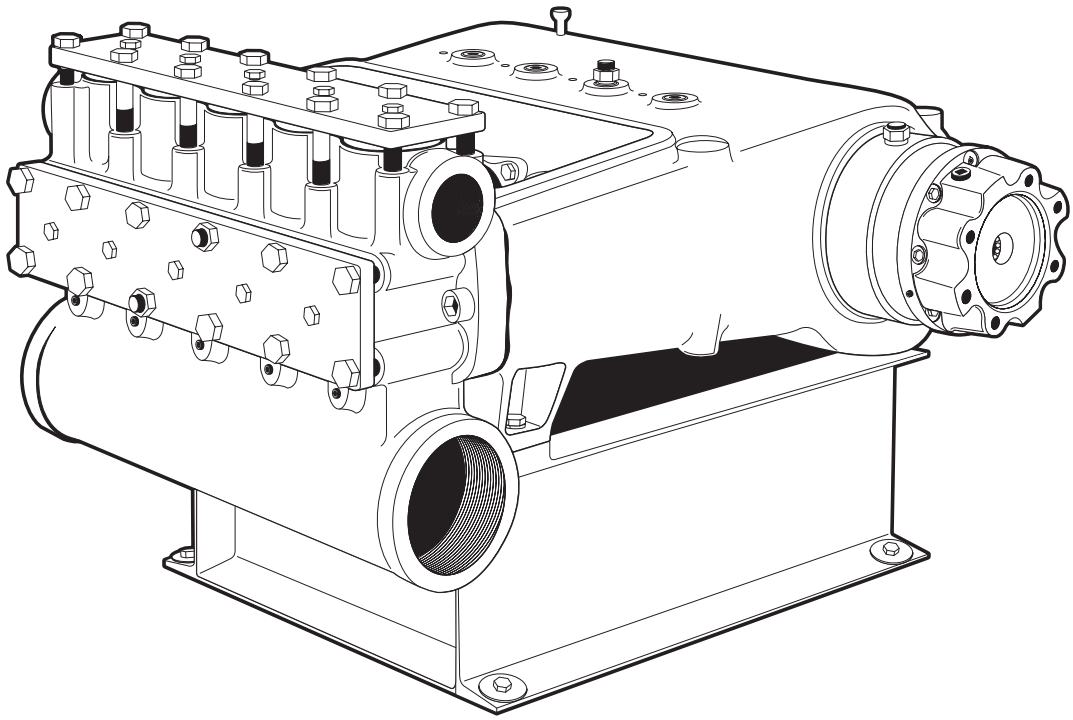

MODELS

MA-45M, MA-75L, MA-75M, MA-75H,
SC-80, SC-80H, SC-115L, SC-115, SC-115H

QUINTUPLEX PUMPS

INSTALLATION AND SERVICE MANUAL

NOTE! To the installer: Please make sure you provide this manual to the owner of the equipment or to the responsible party who maintains the system.

Part # AP-03-100 | © 2017 Pentair plc | 06/23/17

Engineering Data
MA-45M 3
MA-75L 4
MA-75M 5
MA-75H 6
SC-80 7
SC-80H 8
SC-115L 9
SC-115 10
SC-115H 11

Dimensional Data 12–13

Installation, Operation, Lubrication, Maintenance and Storage Instructions 14
Safety 14
Storage 14
Pump Location and Piping Design 14
Suction Piping 14–15
Acceleration Head 15
Discharge Piping 15–16
Bypass Piping 16
Lubrication 16
V-Belt Drive 16, 18
Suggested Piping System for Plunger Pumps 17
Direction of Rotation 18
Automatic (Safety) Shutdowns 18

Crankshaft Assembly 18
General 18
Tapered Roller Bearings 18
Center Bearings 19

Installing Crankshaft 19
General 19
Shim Adjustment of Tapered Roller Bearings 19
Installation of Crankshaft Oil Seal 19

Connecting Rod, Crosshead and Crosshead Pin Assembly 19
General 19
Installing Wrist Pin Bushings 20
Pinning the Crosshead 20
Order of Assembly 20
Precision Crankpin (Crankthrow) Bearings 20-21

Wiper Box Assembly 21
General 21
"Poly Pak" Seal 21
Mechanical Oil Seal 21
Inserting the Plunger 21

Stuffing Box, Packing and Plunger Assemblies 21
General 21-22
Spring Loaded Packing 22
Hi/Lo Gland Adjustable Packing 22
Inserting the Plunger 22
Installing the Gland 22
Installing the Liquid End 22-23
Installing the Stuffing Box 23
Connecting the Plunger 23
Packing 23
Plungers 23-24
Converting Plunger to Piston 24
Changing Piston Cups 24

Dual-Stem Guided and Disc Valve Systems 24
General 24
Disc Valve Construction 24
Setting the Valve Seat 24-25
Installing the Valve Seat 25
Installing O-Rings, Dual Stem Guided Spring and Cage 25
Installing Disc, Spring, Disc Valves and Stem 25
Pulling the Valve Seat 25
Removing the Valve Seat 25

Trouble Location and Remedy 26-28

Parts Lists 29-40

Warranty 42

MA-45M ENGINEERING DATA	
Power End	
Model Quintuplex Pump	MA-45M
Maximum Input HP at Speed	45 at 600 rpm
Rated Continuous Plunger Load	2,376 lbs
Stroke	2-1/4"
Maximum Rated Continuous Speed	600 rpm
Normal Continuous Speed Range	150 to 550 rpm
Minimum Speed	100 rpm
Oil Capacity	8 U.S. quarts
Viscosity, S.S.U. at 210ºF	70 to 84
Power End Oiling System	Splash & Scoop
Power Frame, One-Piece	Cast Iron
Crosshead, Full Cylindrical	Cast Iron
Crosshead, Diameter x Length	3-1/4" x 3-5/8"
Crankshaft	Ductile Iron
Crankshaft Diameters: At Drive Extension At Tapered Roller Bearings At Center Bearings At Crankpin Bearings, Diameter x Length	 2.250/2.249" 3.15" 4.91" 2-1/4" x 1-5/8"
Crosshead (Wrist) Pin, Case-Hardened and Ground	AISI 8620
Main Bearings, Tapered Roller	Timken
Center Bearings, Two, Precision	Steel Backed, Babbitt-Lined
Crankpin Bearings, Precision Automotive	Steel Backed, Babbitt-Lined
Extension (Pony) Rod: Integral w/ Plungers, 1-7/8" thru 1-1/8" Separate w/ Plungers, 1" thru 3/4"	 316 S.S. 416 S.S.
Connecting Rod, Automotive Type	Ductile Iron
Average Crosshead Speed: At 600 rpm At 450 rpm	 225 fpm 169 fpm
Minimum Life Expectancy, Main Bearings, L_{10}	75,000+hr
Liquid End	
Plunger Size Range, diameter	1-7/8" thru 3/4"
Maximum Continuous Working Pressure	3,000 psi
Hydrostatic Test	4,500 psi
Discharge Connection Size	1-1/2" NPTF
Suction Connection Size	2 1/2" NPTF
Available Liquid End Materials, A.S.T.M.: Nickel Aluminum Bronze Forged Steel Block Ductile Iron	 B148-C955 A105 A536 80-55-06

MA-45M ENGINEERING DATA	
Liquid End (Continued)	
Plunger Type Rokide Stainless Steel: Chromium Oxide-Coated	 316 S.S.
Stuffing Boxes, Field-Removable and Replaceable: Stainless Steel, Hardened Carbon Steel	 17-4PH 1020
Packing Types Available: Gland-loaded, Non-Adjustable Spring-loaded, Cup-Type Spring-loaded, Braided PTFE Coating & Aramid Fiber Spring-loaded, Garlock	 Style 838 Style 120X Style 140/141 Style 8921K
Valve Cover and Cylinder Head Plugs	416 S.S. or 316 S.S.
Retainer Plates, Ductile Iron, A.S.T.M.	A536 80-55-06
Seals, Stuffing Boxes, Valve Covers, Cylinder Heads	Buna-N
Bolting, High Strength, Heat Treated	Alloy Steel
Available Valve Types: Standard, Acetal Resin Optional, Hardened and Lapped Double Stem-Guided	 Acetal 17-4PH S.S. 17-4PH S.S.
Valve Seat, Liquid Passage Areas: Plate (Disc) Valves, (Acetal or S.S.) Double Stem-Guided Valve	 1.400 sq. in. 0.958 sq. in.
Average Liquid Velocity with 1-7/8" plungers & plate valves: At 600 crankshaft rpm At 450 crankshaft rpm	 7.40 fps 5.55 fps
Average Liquid Velocity with 1-7/8" plungers & double stem valves: At 600 crankshaft rpm At 450 crandshaft rpm	 10.81 fps 8.11 fps
Average Liquid Velocity, 1-7/8" plungers at 600 rpm: Suction Manifold Discharge Manifold	 5.40 fps 14.65 fps
General	
Overall Dimensions: Length Width Height	 31-3/4" 29" 12-3/8"
Approximate Weights: With Aluminum Bronze Liquid End With Ductile Iron Liquid End With Forged Steel Liquid End	 710 lbs 690 lbs 720 lbs

MA-75L ENGINEERING DATA	
Power End	
Model Quintuplex Pump	MA-75L
Maximum Input HP at Speed	75 at 550 rpm
Rated Continuous Plunger Load	3,535 lbs
Stroke	2-3/4"
Maximum Rated Continuous Speed	550 rpm
Normal Continuous Speed Range	150 to 450 rpm
Minimum Speed	100 rpm
Oil Capacity	12 U.S. quarts
Viscosity, S.S.U. at 210ºF	70 to 84
Power End Oiling System	Splash & Scoop
Power Frame, One-Piece	Cast Iron
Crosshead, Full Cylindrical	Cast Iron
Crosshead, Diameter x Length	4" x 4-1/2"
Crankshaft	Ductile Iron
Crankshaft Diameters: At Drive Extension At Tapered Roller Bearings At Crankpin Bearings, Diameter x Length	 2.750/2.749" 3.35" 2-3/4" x 2"
Crosshead (Wrist) Pin, Case-Hardened and Ground	AISI 8620
Wrist Pin Bushing, SAE 660, Diameter x Width	1-5/16" x 2"
Main Bearings, Tapered Roller	Timken
Center Bearings, Two, Precision	Steel Backed, Babbitt-Lined
Crankpin Bearings, Precision Automotive	Steel Backed, Babbitt-Lined
Extension (Pony) Rod: Integral w/ Plungers	 316 S.S.
Connecting Rod, Automotive Type	Ductile Iron
Average Crosshead Speed: At 550 rpm	 252 fpm
Minimum Life Expectancy, Main Bearings, L_{10}	75,000+hr
Liquid End	
Plunger Size Range, diameter	2-1/4" Thru 2-3/4"
Maximum Continuous Working Pressure	889 psi
Hydrostatic Test	1,300 psi
Discharge Connection Size	2-1/2" NPTF
Suction Connection Size	5" NPTF
Available Liquid End Materials, A.S.T.M.: Carbon Steel Block Ductile Iron Stainless Steel	 A36 or A516 A536 80-55-06 Various Grades
Plunger Type Rokide Stainless Steel: Chromium Oxide-Coated	 316 S.S.
Stuffing Boxes, Field-Removable and Replaceable: Stainless Steel, Hardened Carbon Steel	 17-4PH 1020

MA-75L ENGINEERING DATA	
Liquid End (Continued)	
Packing Types Available: Gland-loaded, Non-Adjustable Spring-loaded, Cup-Type Spring-loaded, Braided PTFE Coating & Aramid Fiber Spring-loaded, Garlock	 Style 838 Style 120X Style 140/141 Style 8921K
Valve Cover and Cylinder Head Plugs	316 S.S.
Retainer Plates, Ductile Iron, A.S.T.M.	A536 80-55-06
Seals, Stuffing Boxes, Valve Covers, Cylinder Heads	Buna-N
Bolting, High Strength, Heat Treated	Alloy Steel
Available Valve Types: Standard, Acetal Resin Optional, Hardened and Lapped Dual Stem-Guided	 Acetal 17-4PH S.S. 17-4PH S.S.
Valve Seat, Liquid Passage Areas: Plate (Disc) Valves, (Acetal or S.S.) Double Stem-Guided Valve	 2.4 sq. in. 2.3 sq. in.
Average Liquid Velocity thru Seat with 2-3/4" plungers & plate valves: At 550 crankshaft rpm	 10.8 fps
Average Liquid Velocity thru Seat with 2-3/4" plungers & dual stem valves: At 550 crankshaft rpm	 9.7 fps
Average Liquid Velocity, 2-3/4" plungers at 550 rpm: Suction Manifold Discharge Manifold	 2.3 fps 12.5 fps
General	
Overall Dimensions: Length Width Height	 37-5/16" 37-3/4" 14-3/4"
Approximate Weights: With Ductile Iron Liquid End With Forged Steel Liquid End	 1,435 lbs 1,675 lbs

MA-75M ENGINEERING DATA	
Power End	
Model Quintuplex Pump	MA-75M
Maximum Input HP at Speed	75 at 550 rpm
Rated Continuous Plunger Load	3,535 lbs
Stroke	2-3/4"
Maximum Rated Continuous Speed	550 rpm
Normal Continuous Speed Range	150 to 450 rpm
Minimum Speed	100 rpm
Oil Capacity	12 U.S. quarts
Viscosity, S.S.U. at 210ºF	70 to 84
Power End Oiling System	Splash & Scoop
Power Frame, One-Piece	Cast Iron
Crosshead, Full Cylindrical	Cast Iron
Crosshead, Diameter x Length	4" x 4-1/2"
Crankshaft	Ductile Iron
Crankshaft Diameters: At Drive Extension At Tapered Roller Bearings At Crankpin Bearings, Diameter x Length	 2.750/2.749" 3.35" 2-3/4" x 2"
Crosshead (Wrist) Pin, Case-Hardened and Ground	AISI 8620
Wrist Pin Bushing, SAE 660, Diameter x Width	1-5/16" x 2"
Main Bearings, Tapered Roller	Timken
Center Bearings, Two, Precision	Steel Backed, Babbitt-Lined
Crankpin Bearings, Precision Automotive	Steel Backed, Babbitt-Lined
Extension (Pony) Rod: Integral w/ Plungers, 2-1/4" thru 1-3/8" Separate w/ Plungers, 1-1/4" thru 3/4"	 416 S.S. 416 S.S.
Connecting Rod, Automotive Type	Ductile Iron
Average Crosshead Speed: At 550 rpm	 252 fpm
Minimum Life Expectancy, Main Bearings, L_{10}	75,000+hr
Liquid End	
Plunger Size Range, diameter	2-1/4" Thru 3/4"
Maximum Continuous Working Pressure	3,000 psi
Hydrostatic Test	4,500 psi
Discharge Connection Size	2" NPTF
Suction Connection Size	3" NPTF
Available Liquid End Materials, A.S.T.M.: Nickel Aluminum Bronze Forged Steel Block Ductile Iron Stainless Steel	 B148-C955 A105 A536 80-55-06 Various Grades
Plunger Type Rokide Stainless Steel: Chromium Oxide-Coated	 416 S.S.

MA-75M ENGINEERING DATA	
Liquid End (Continued)	
Stuffing Boxes, Field-Removable and Replaceable: Stainless Steel, Hardened Carbon Steel	 17-4PH 1020
Packing Types Available: Gland-loaded, Non-Adjustable Spring-loaded, Cup-Type Spring-loaded, Braided PTFE Coating & Aramid Fiber Spring-loaded, Garlock	 Style 838 Style 120X Style 140/141 Style 8921K
Valve Cover and Cylinder Head Plugs	416 S.S. or 316 S.S.
Retainer Plates, Ductile Iron, A.S.T.M.	A536 80-55-06
Seals, Stuffing Boxes, Valve Covers, Cylinder Heads	Buna-N
Bolting, High Strength, Heat Treated	Alloy Steel
Available Valve Types: Standard, Acetal Resin Optional, Hardened and Lapped Double Stem-Guided	 Acetal 17-4PH S.S. 17-4PH S.S.
Valve Seat, Liquid Passage Areas: Plate (Disc) Valves, (Acetal or S.S.) Double Stem-Guided Valve	 2.3 sq. in. 1.5 sq. in.
Average Liquid Velocity thru Seat with 2-1/4" plungers & plate valves: At 550 crankshaft rpm At 350 crankshaft rpm	 7.5 fps 4.8 fps
Average Liquid Velocity thru Seat with 2-1/4" plungers & double stem valves: At 550 crankshaft rpm At 350 crandshaft rpm	 11.2 fps 7.1 fps
Average Liquid Velocity, 2-1/4" plungers at 550 rpm: Suction Manifold Discharge Manifold	 4.7 fps 10.3 fps
General	
Overall Dimensions: Length Width Height	 36-1/4" 37-3/4" 14-3/4"
Approximate Weights: With Aluminum Bronze Liquid End With Ductile Iron Liquid End With Forged Steel Liquid End	 1,270 lbs 1,240 lbs 1,375 lbs

MA-75H ENGINEERING DATA	
Power End	
Model Quintuplex Pump	MA-75H
Maximum Input HP at Speed	75 at 550 rpm
Rated Continuous Plunger Load	3,535 lbs
Stroke	2-3/4"
Maximum Rated Continuous Speed	550 rpm
Normal Continuous Speed Range	150 to 450 rpm
Minimum Speed	100 rpm
Oil Capacity	12 U.S. quarts
Viscosity, S.S.U. at 210ºF	70 to 84
Power End Oiling System	Splash & Scoop
Power Frame, One-Piece	Cast Iron
Crosshead, Full Cylindrical	Cast Iron
Crosshead, Diameter x Length	4" x 4-1/2"
Crankshaft	Ductile Iron
Crankshaft Diameters: At Drive Extension At Tapered Roller Bearings At Crankpin Bearings, Diameter x Length	 2.750/2.749" 3.35" 2-3/4" x 2"
Crosshead (Wrist) Pin, Case-Hardened and Ground	AISI 8620
Wrist Pin Bushing, SAE 660, Diameter x Width	1-5/16" x 2"
Main Bearings, Tapered Roller	Timken
Center Bearings, Two, Precision	Steel Backed, Babbitt-Lined
Crankpin Bearings, Precision Automotive	Steel Backed, Babbitt-Lined
Extension (Pony) Rod: Separate w/ Plungers, 1-1/4" thru 3/4"	 416 S.S.
Connecting Rod, Automotive Type	Ductile Iron
Average Crosshead Speed: At 550 rpm	 252 fpm
Minimum Life Expectancy, Main Bearings, L_{10}	75,000+hr
Liquid End	
Plunger Size Range, diameter	7/8" Thru 1-1/8"
Maximum Continuous Working Pressure	5,000 psi
Hydrostatic Test	7,500 psi
Discharge Connection Size	1-12" NPTF
Suction Connection Size	2" NPTF
Available Liquid End Materials, A.S.T.M.: Forged Steel Forged Stainless Steel	 A105 2205
Plunger Type Rokide Stainless Steel: Chromium Oxide-Coated	 316 S.S.
Stuffing Boxes, Field-Removable and Replaceable: Carbon Steel	 1020
Packing Types Available: Spring-loaded, Braided PTFE Coating & Aramid Fiber	 Style 140/141

MA-75H ENGINEERING DATA	
Liquid End (Continued)	
Valve Cover and Cylinder Head Plugs	1020 or 316 S.S.
Retainer Plates, Ductile Iron, A.S.T.M.	A536 80-55-06
Seals, Stuffing Boxes, Valve Covers, Cylinder Heads	Buna-N
Bolting, High Strength, Heat Treated	Alloy Steel
Available Valve Types: Hardened and Lapped Abrasion Resistant	 17-4PH S.S. 17-4PH S.S.
Valve Spring Material	Inconel
Valve Seat, Liquid Passage Areas: Disc Valves Abrasion Resistant	 1.4 sq. in. 1 sq. in.
Average Liquid Velocity thru Seat with 1" plungers & disc valves: At 550 crankshaft rpm At 350 crankshaft rpm	 2.3 fps 1.4 fps
Average Liquid Velocity thru Seat with 1" plungers & abrasion resistant valves: At 550 crankshaft rpm At 350 crankshaft rpm	 3.4 fps 2.2 fps
Average Liquid Velocity with 1" plungers at 550 rpm: Thru Suction Manifold Thru Discharge Manifold	 2.1 fps 3.55 fps
General	
Overall Dimensions: Length Width Height	 36-1/4" 37-3/4" 14-3/4"
Approximate Weights: With Block Liquid End	 1,240 lbs

SC-80 ENGINEERING DATA	
Power End	
Model Quintuplex Pump	SC-80
Maximum Input HP at Speed	100 at 600 rpm
Rated Continuous Plunger Load	5,280 lbs
Stroke	2-1/4"
Maximum Rated Continuous Speed	600 rpm
Normal Continuous Speed Range	250 to 600 rpm
Minimum Speed	50 rpm
Oil Capacity	8 U.S. quarts
Viscosity, S.S.U. at 210ºF	70 to 84
Power End Oiling System	Splash & Scoop
Power Frame, One-Piece	Cast Iron
Crosshead, Full Cylindrical	Cast Iron
Crosshead, Diameter x Length	3-1/4" x 3-5/8"
Crankshaft	Ductile Iron
Crankshaft Diameters: At Drive Extension At Tapered Roller Bearings At Center Bearings At Crankpin Bearings, Diameter x Length	 2.250/2.249" 3.15" 4.91" 2-1/4" x 1-5/8"
Crosshead (Wrist) Pin, Case-Hardened and Ground	AISI 8620
Main Bearings, Tapered Roller	Timken
Center Bearings, Two, Precision	Steel Backed, Babbitt-Lined
Crankpin Bearings, Precision Automotive	Steel Backed, Babbitt-Lined
Extension (Pony) Rod: Integral w/ Plungers, 1-7/8" thru 1-1/2" sizes	 316 S.S.
Connecting Rod, Automotive Type	Ductile Iron
Average Crosshead Speed: At 600 rpm At 450 rpm	 225 fpm 169 fpm
Minimum Life Expectancy, Main Bearings, L_{10}	30,000+hr
Liquid End	
Plunger Size Range, diameter	1-7/8" Thru 1-1/2"
Maximum Continuous Working Pressure	3,500 psi
Hydrostatic Test	5,250 psi
Discharge Connection Size	1-1/2" NPTF
Suction Connection Size	2-1/2" NPTF
Available Liquid End Materials, A.S.T.M.: Ductile Iron	 A536 80-55-06
Plunger Type Rokide Stainless Steel: Chromium Oxide-Coated	 316 S.S.
Stuffing Boxes, Field-Removable and Replaceable: Carbon Steel	 1020

SC-80 ENGINEERING DATA	
Liquid End (Continued)	
Packing Types Available: Gland-loaded, Non-Adjustable Spring-loaded, Cup-Type Spring-loaded, Braided PTFE Coating & Aramid Fiber Spring-loaded, Garlock	 Style 838 Style 120X Style 140/141 Style 8921K
Valve Cover and Cylinder Head Plugs	416 S.S.
Retainer Plates, Ductile Iron, A.S.T.M.	A36
Seals, Stuffing Boxes, Valve Covers, Cylinder Heads	Buna-N
Bolting, High Strength, Heat Treated	Alloy Steel
Available Valve Types: Standard, Acetal Resin Optional, Hardened and Lapped Double Stem-Guided	 Acetal 17-4PH S.S. 17-4PH S.S.
Valve Seat, Liquid Passage Areas: Plate (Disc) Valves, (Acetal or S.S.) Double Stem-Guided Valve	 1.400 sq. in. 0.958 sq. in.
Average Liquid Velocity with 1-7/8" plungers & plate valves: At 600 crankshaft rpm At 450 crankshaft rpm	 7.40 fps 5.55 fps
Average Liquid Velocity with 1-7/8" plungers & double stem valves: At 600 crankshaft rpm At 450 crankshaft rpm	 10.81 fps 8.11 fps
Average Liquid Velocity, 1-7/8" plungers at 600 rpm: Thru Suction Manifold Thru Discharge Manifold	 5.40 fps 14.65 fps
General	
Overall Dimensions: Length Width Height	 31-3/4" 27-3/8" 13-1/8"
Approximate Weights	510 lbs

SC-80H ENGINEERING DATA	
Power End	
Model Quintuplex Pump	SC-80H
Maximum Input HP at Speed	100 at 600 rpm
Rated Continuous Plunger Load	5,280 lbs
Stroke	2-1/4"
Maximum Rated Continuous Speed	600 rpm
Normal Continuous Speed Range	250 to 600 rpm
Minimum Speed	50 rpm
Oil Capacity	7 U.S. quarts
Viscosity, S.S.U. at 210ºF	70 to 84
Power End Oiling System	Splash & Scoop
Power Frame, One-Piece	Cast Iron
Crosshead, Full Cylindrical	Cast Iron
Crosshead, Diameter x Length	3-1/4" x 3-5/8"
Crankshaft	Ductile Iron
Crankshaft Diameters: At Drive Extension At Tapered Roller Bearings At Crankpin Bearings, Diameter x Length	 2.250/2.251" 3.15" 2-1/4" x 1-5/8"
Crosshead (Wrist) Pin, Case-Hardened and Ground	AISI 8620
Main Bearings, Tapered Roller	Timken
Center Bearings (2)	Steel Backed, Babbitt-Lined
Crankpin Bearings, Precision Automotive	Steel Backed, Babbitt-Lined
Extension (Pony) Rod	17-4 PH S.S.
Connecting Rod, Automotive Type	Ductile Iron
Average Crosshead Speed: At 600 rpm At 450 rpm	 225 fpm 169 fpm
Minimum Life Expectancy, Main Bearings, L_{10}	15,000+hr
Liquid End	
Plunger Size Range, diameter	1-3/8" Thru 1-1/8"
Maximum Continuous Working Pressure	5,000 psi
Hydrostatic Test	7,500 psi
Discharge Connection Size	1" NPTF
Suction Connection Size	1-1/2" NPTF
Available Liquid End Materials, A.S.T.M.: Alloy Steel Stainless Steel	 4140 15-5 PH
Plunger Type Stainless Steel: Chromium Oxide-Coated	 316 S.S.
Stuffing Boxes, Field-Removable and Replaceable: Carbon Steel	 1040

SC-80H ENGINEERING DATA	
Liquid End (Continued)	
Packing Types Available: Spring-loaded, Cup-Type Spring-loaded, Braided PTFE Coating & Aramid Fiber	 Style 120X Style 140
Valve Cover and Cylinder Head Plugs	410 S.S.
Retainer Plates, Steel, A.S.T.M.	A36
Seals, Stuffing Boxes, Valve Covers, Cylinder Heads	Buna-N
Bolting, High Strength, Heat Treated	Alloy Steel
Available Valve Types: Disc Abrasion Resistant	 17-4PH S.S. 17-4PH S.S.
Valve Seat, Liquid Passage Areas: Suction Discharge	 0.573 sq. in. 0.958 sq. in.
Average Liquid Velocity with 1-3/8" plungers: At 600 crankshaft rpm	 5.81 fps
Average Liquid Velocity at 600 rpm: Thru Suction Manifold Thru Discharge Manifold	 4.73 fps 10.64 fps
General	
Overall Dimensions: Length Width Height	 31-3/4" 18-5/8" 12-3/8"
Approximate Weights: With Steel Liquid End	 475 lbs

SC-115L ENGINEERING DATA	
Power End	
Model Quintuplex Pump	SC-115L
Maximum Input HP at Speed	154 at 550 rpm
Rated Continuous Plunger Load	7,216 lbs
Stroke	2-3/4"
Maximum Rated Continuous Speed	550 rpm
Normal Continuous Speed Range	150 to 450 rpm
Minimum Speed	100 rpm
Oil Capacity	12 U.S. quarts
Viscosity, S.S.U. at 210ºF	70 to 84
Power End Oiling System	Splash & Scoop
Power Frame, One-Piece	Cast Iron
Crosshead, Full Cylindrical	Cast Iron
Crosshead, Diameter x Length	4" x 4-1/2"
Crankshaft	Ductile Iron
Crankshaft Diameters: At Drive Extension At Tapered Roller Bearings At Crankpin Bearings, Diameter x Length	 2.750/2.749" 3.35" 2-3/4" x 2"
Crosshead (Wrist) Pin, Case-Hardened and Ground	AISI 8620
Wrist Pin Bushing, SAE 660, Diameter x Width	1-5/16" x 2"
Main Bearings, Tapered Roller	Timken
Center Bearings, Two, Precision	Steel Backed, Babbitt-Lined
Crankpin Bearings, Precision Automotive	Steel Backed, Babbitt-Lined
Extension (Pony) Rod: Integral w/ Plungers, 2-3/4" thru 2-1/4" sizes Separate w/ Plungers, 1-1/4" thru 3/4"	 416 S.S. 416 S.S.
Connecting Rod, Automotive Type	Ductile Iron
Average Crosshead Speed: At 550 rpm	 252 fpm
Minimum Life Expectancy, Main Bearings, L_{10}	40,000+hr
Liquid End	
Plunger Size Range, diameter	2-3/4" Thru 2-1/4"
Maximum Continuous Working Pressure	1,815 psi
Hydrostatic Test	2,700 psi
Discharge Connection Size	2-1/2" NPTF
Suction Connection Size	5" NPTF
Available Liquid End Materials, A.S.T.M.: Ductile Iron	 ASTM A536 80-55-06
Plunger Type Rokide Stainless Steel: Chromium Oxide-Coated	 416 S.S.

SC-115L ENGINEERING DATA	
Liquid End (Continued)	
Stuffing Boxes, Field-Removable and Replaceable: Carbon Steel	 1020
Piston Liner Material	Chrome Oxide on 4140
Packing Types Available: Gland-loaded, Non-Adjustable Spring-loaded, Cup-Type Spring-loaded, Braided PTFE Coating & Aramid Fiber	 Style 838 Style 120X Style 140/141
Piston Cup Material	HSN and Aramid Fiber
Valve Cover and Cylinder Head Plugs	416 or 316 S.S.
Retainer Plates, Carbon Steel	A36
Seals, Stuffing Boxes, Valve Covers, Cylinder Heads	Buna-N
Bolting, High Strength, Heat Treated	Alloy Steel
Available Valve Types: Standard, Abrasion Resistant Optional, Hardened and Lapped Double Stem-Guided	 Wing Guided 17-4PH S.S. 17-4PH S.S.
Valve Spring Material	Inconel
Valve Seat, Liquid Passage Areas: Plate (Disc) Valves, (Acetal or S.S.) Double Stem-Guided Valve	 2.3 sq. in. 2.4 sq. in.
Average Liquid Velocity thru Seat with 2-3/4" plungers & plate valves: At 550 crankshaft rpm At 350 crankshaft rpm	 11.1 fps 7.1 fps
Average Liquid Velocity thru Seat with 2-3/4" plungers & double stem valves: At 550 crankshaft rpm At 350 crankshaft rpm	 10.7 fps 6.8 fps
Average Liquid Velocity with 2-3/4" plungers at 550 rpm: Thru Suction Manifold Thru Discharge Manifold	 3.1 fps 14.7 fps
General	
Overall Dimensions: Length Width Height	 43-1/8" 37-1/4" 15-1/4"
Approximate Weights: With Carbon Steel Liquid End With Cast Ductile Iron Liquid End	 1,520 lbs 1,450 lbs

SC-115 ENGINEERING DATA	
Power End	
Model Quintuplex Pump	SC-115
Maximum Input HP at Speed	154 at 550 rpm
Rated Continuous Plunger Load	7,216 lbs
Stroke	2-3/4"
Maximum Rated Continuous Speed	550 rpm
Normal Continuous Speed Range	150 to 450 rpm
Minimum Speed	100 rpm
Oil Capacity	15 U.S. quarts
Viscosity, S.S.U.at 210ºF	70 to 84
Power End Oiling System	Splash & Scoop
Power Frame, One-Piece	Cast Iron
Crosshead, Full Cylindrical	Cast Iron
Crosshead, Diameter x Length	4" x 4-1/2"
Crankshaft	Ductile Iron
Crankshaft Diameters: At Drive Extension At Tapered Roller Bearings At Crankpin Bearings, Diameter x Length	 2.750/2.749" 3.35" 2-3/4" x 2"
Crosshead (Wrist) Pin, Case-Hardened and Ground	AISI 8620
Wrist Pin Bushing, SAE 660, Diameter x Width	1-5/16" x 2"
Main Bearings, Tapered Roller	Timken
Center Bearings, Two, Precision	Steel Backed, Babbitt-Lined
Crankpin Bearings, Precision Automotive	Steel Backed, Babbitt-Lined
Extension (Pony) Rod: Integral w/ Plungers, 2-1/4" thru 1-3/4" sizes Separate w/ Plungers, 1-1/4" thru 3/4"	 416 S.S. 416 S.S.
Connecting Rod, Automotive Type	Ductile Iron
Average Crosshead Speed: At 550 rpm	 252 fpm
Minimum Life Expectancy, Main Bearings, L_{10}	40,000+hr
Liquid End	
Plunger Size Range, diameter	2-1/4" Thru 1-3/4"
Maximum Continuous Working Pressure	3,500 psi
Hydrostatic Test	5,250 psi
Discharge Connection Size	2" NPTF
Suction Connection Size	3" NPTF
Available Liquid End Materials, A.S.T.M.: Ductile Iron	 A536 80-55-06
Plunger Type Rokide Stainless Steel: Chromium Oxide-Coated	 416 S.S.

SC-115 ENGINEERING DATA	
Liquid End (Continued)	
Stuffing Boxes, Field-Removable and Replaceable: Carbon Steel	 1020
Packing Types Available: Gland-loaded, Non-Adjustable Spring-loaded, Cup-Type Spring-loaded, Braided PTFE Coating & Aramid Fiber Spring-loaded, Garlock	 Style 838 Style 120X Style 140/141 Style 8921K
Valve Cover and Cylinder Head Plugs	416 or 316 S.S.
Retainer Plates, Ductile Iron, A.S.T.M.	A536 80-55-06
Seals, Stuffing Boxes, Valve Covers, Cylinder Heads	Buna-N
Bolting, High Strength, Heat Treated	Alloy Steel
Available Valve Types: Standard, Acetal Resin Optional, Hardened and Lapped Double Stem-Guided	 Acetal 17-4PH S.S. 17-4PH S.S.
Valve Spring Material	Inconel
Valve Seat, Liquid Passage Areas: Plate (Disc) Valves, (Acetal or S.S.) Double Stem-Guided Valve	 2.3 sq. in. 1.5 sq. in.
Average Liquid Velocity thru Seat with 2-1/4" plungers & plate valves: At 550 crankshaft rpm At 350 crankshaft rpm	 7.5 fps 4.8 fps
Average Liquid Velocity thru Seat with 2-1/4" plungers & double stem valves: At 550 crankshaft rpm At 350 crankshaft rpm	 11.2 fps 7.1 fps
Average Liquid Velocity with 2-1/4" plungers at 550 rpm: Thru Suction Manifold Thru Discharge Manifold	 5.6 fps 14.2 fps
General	
Overall Dimensions: Length Width Height	 36-1/4" 37-3/4" 14-3/4"
Approximate Weights: With Ductile Iron Liquid End	 1,240 lbs

SC-115H ENGINEERING DATA	
Power End	
Model Quintuplex Pump	SC-115H
Maximum Input HP at Speed	154 at 550 rpm
Rated Continuous Plunger Load	7,216 lbs
Stroke	2-3/4"
Maximum Rated Continuous Speed	550 rpm
Normal Continuous Speed Range	150 to 450 rpm
Minimum Speed	100 rpm
Oil Capacity	12 U.S. quarts
Viscosity, S.S.U. at 210ºF	70 to 84
Power End Oiling System	Splash & Scoop
Power Frame, One-Piece	Cast Iron
Crosshead, Full Cylindrical	Cast Iron
Crosshead, Diameter x Length	4" x 4-1/2"
Crankshaft	Ductile Iron
Crankshaft Diameters: At Drive Extension At Tapered Roller Bearings At Crankpin Bearings, Diameter x Length	 2.750/2.749" 3.35" 2-3/4" x 2"
Crosshead (Wrist) Pin, Case-Hardened and Ground	AISI 8620
Wrist Pin Bushing, SAE 660, Diameter x Width	1-5/16" x 2"
Main Bearings, Tapered Roller	Timken
Center Bearings, Two, Precision	Steel Backed, Babbitt-Lined
Crankpin Bearings, Precision Automotive	Steel Backed, Babbitt-Lined
Extension (Pony) Rod: Integral w/ Plungers, 2-1/4" thru 1-3/4" sizes Separate w/ Plungers, 1-1/4" thru 3/4"	 416 S.S. 416 S.S.
Connecting Rod, Automotive Type	Ductile Iron
Average Crosshead Speed: At 550 rpm	 252 fpm
Minimum Life Expectancy, Main Bearings, L_{10}	40,000+hr
Liquid End	
Plunger Size Range, diameter	1-5/8" Thru 1-1/4"
Maximum Continuous Working Pressure	5,878 psi
Hydrostatic Test	8,800 psi
Discharge Connection Size	2" NPTF
Suction Connection Size	3" NPTF
Available Liquid End Materials, A.S.T.M.: Alloy Steel Stainless Steel	 4140 2205
Plunger Type Rokide Stainless Steel: Chromium Oxide-Coated	 416 S.S.

SC-115H ENGINEERING DATA	
Liquid End (Continued)	
Stuffing Boxes, Field-Removable and Replaceable: Carbon Steel	 1020
Packing Types Available: Spring-loaded, Cup-Type Spring-loaded, Braided PTFE Coating & Aramid Fiber	 Style 120X Style 140/141
Valve Cover and Cylinder Head Plugs	416 or 316 S.S.
Retainer Plates, Ductile Iron, A.S.T.M.	A536 80-55-06
Seals, Stuffing Boxes, Valve Covers, Cylinder Heads	Buna-N
Bolting, High Strength, Heat Treated	Alloy Steel
Available Valve Types: Hardened and Lapped Abrasion Resistant	 17-4PH S.S. 17-4PH S.S.
Valve Spring Material	Inconel
Valve Seat, Liquid Passage Areas: Plate (Disc) Valves, (Acetal or S.S.) Double Stem-Guided Valve	 1.4 sq. in. 1 sq. in.
Average Liquid Velocity thru Seat with 1-5/8" plungers & plate valves: At 550 crankshaft rpm At 350 crankshaft rpm	 6.4 fps 3.79 fps
Average Liquid Velocity thru Seat with 1-5/8" plungers & double stem valves: At 550 crankshaft rpm At 350 crankshaft rpm	 9.5 fps 5.5 fps
Average Liquid Velocity with 1-5/8" plungers at 550 rpm: Thru Suction Manifold Thru Discharge Manifold	 2.9 fps 7.4 fps
General	
Overall Dimensions: Length Width Height	 36-1/4" 37-3/4" 14-3/4"
Approximate Weights: With Steel Iron Liquid End	 1,240 lbs

CROSS-SECTION

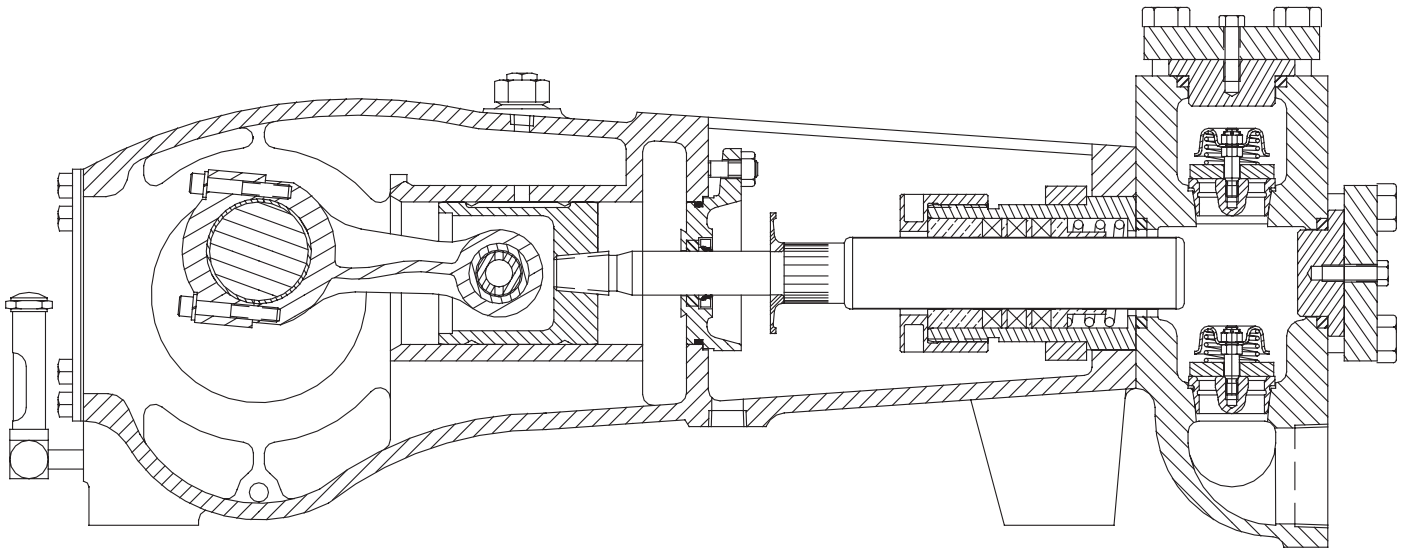

DIMENSIONAL DATA TABLE

Ref. No.	MA-45M	MA-75L	MA-75M	MA-75H	SC-80	SC-80H	SC-115	SC-115L	SC-115H
A1	13-1/8	14-3/8	16-3/4	16-3/4	11-7/16	11-3/8	14-3/8	14-3/8	16-3/4
A2	28-3/4	35-3/8	37-3/4	37-3/4	27-1/16	27	35-3/8	34-7/8	37-3/4
A3	15-5/8	21	21	21	15-5/8	15-5/8	21	20-1/2	21
B1	31-5/8	37-5/16	36-3/4	25-5/8	30-5/8	–	36-3/4	35-1/2	–
B2	22-3/16	25-7/8	25-5/8	6-1/2	22-3/16	–	25-5/8	25-7/8	25-5/8
B3	5-1/4	6-1/2	6-1/2	–	5-1/4	–	6-1/2	6-1/2	6-1/2
B4	–	12-1/8	14-3/4	–	8	–	14-3/4	12-1/8	–
B5	1	5/8	3/4	–	1	–	3/4	4	–
(B) Discharge Connections	1-1/2" NPTF	–	2" NPTF	–	1-1/2" NPTF	–	2" NPTF	2-1/2" NPTF	–
(B) Suction Connections	2-1/2" NPTF	–	3" NPTF	–	2-1/2" NPTF	–	3" NPTF	5" NPTF	–
C1	31-3/4	–	36-3/4	–	31-3/4	30-3/4	36-3/4	–	–
C2	22-3/16	–	25-5/8	25-9/16	22-3/16	22-3/16	25-5/8	–	25-9/16
C3	5-1/4	–	6-1/2	6-1/2	5-1/4	5-1/4	6-1/2	–	6-1/2
C4	8	–	14-1/4	–	8	12-1/8	14-1/4	–	–
C5	1	–	5/8	–	–	1/8	5/8	–	–
(C) Discharge Connections	1-1/2" NPTF	–	2" NPTF	–	1-1/2" NPTF	1-1/2" NPTF	2" NPTF	–	–
(C) Suction Connections	2-1/2" NPTF	–	3" NPTF	–	2-1/2" NPTF	2" NPTF	3" NPTF	–	–
D1	31-3/4	–	36-3/4	–	–	32	–	–	–
D2	22-3/16	–	25-9/16	–	–	22-1/4	–	–	–
D3	5-1/4	–	6-1/2	–	–	5-1/4	–	–	–
D4	8	–	9-1/4	–	–	7-3/8	–	–	–
D5	1	–	1-5/8	–	–	1-5/8	–	–	–
(D) Discharge Connections	1-1/2" ANSI 600 RF	–	2" ANSI 600 RF	–	–	1-1/2" ANSI 2500# RF	–	–	–
(D) Suction Connections	2-1/2" ANSI 150 RF	–	3" ANSI 150 RF	–	–	2" ANSI 150# RF	–	–	–
E1	21-1/2	–	24-3/4	–	21-1/2	21-1/2	24-3/4	24-3/4	–
E2	3-1/4	–	4	–	3-1/4	3-1/4	4	4	–
E3	8-5/8	–	10-3/4	–	8-5/8	8-5/8	10-3/4	10-3/4	–
E4	17-1/4	–	21-1/2	–	17-1/4	17-1/4	21-1/2	21-1/2	–
E5	9/16	–	11/16	–	9/16	9/16	11/16	11/16	–
E6	5/8	–	1	–	5/8	5/8	1	1	–
E7	2-1/2	–	3-1/4	–	2-1/2	2-1/2	3-1/4	3-1/4	–
E8	2 TYP.	–	2 TYP.	–	2 TYP.	2 TYP.	2 TYP.	2 TYP.	–
E9	5/8 TYP.	–	3/4 TYP.	–	5/8 TYP.	5/8 TYP.	3/4 TYP.	3/4 TYP.	–
E10	1-1/4	–	1-1/2	–	1-1/4	1-1/4	1-1/2	1-1/2	–
E11	2-1/2	–	3	–	2-1/2	2-1/2	3	3	–

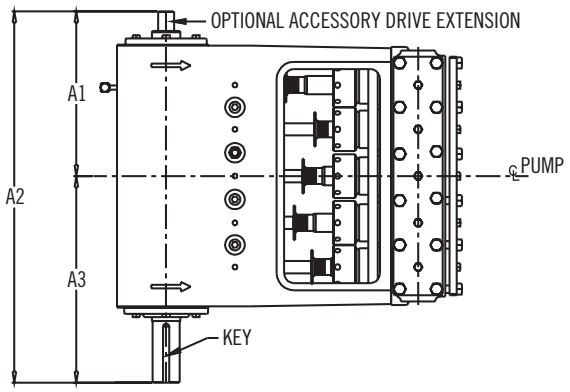

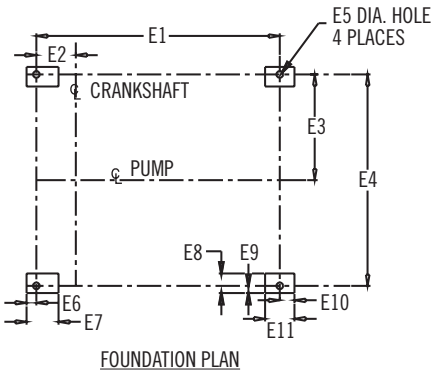

Cast Fluid End

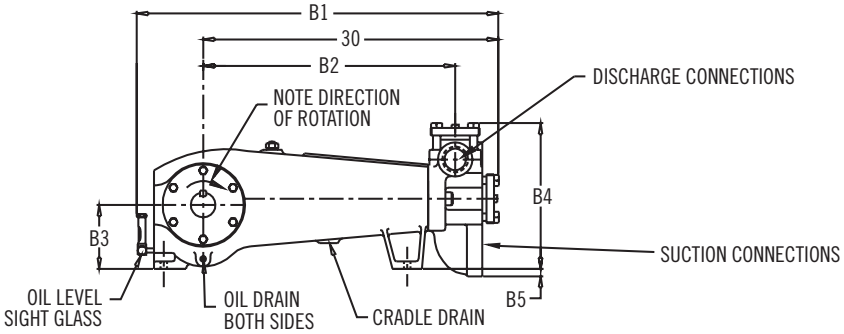

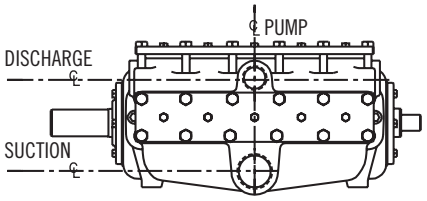

Block Fluid End

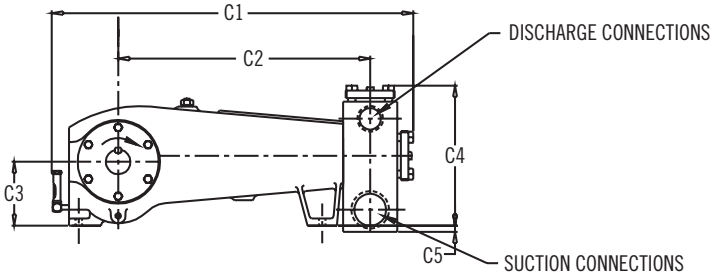

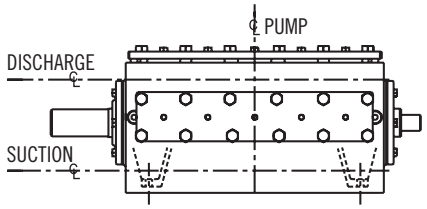

Block Fluid End

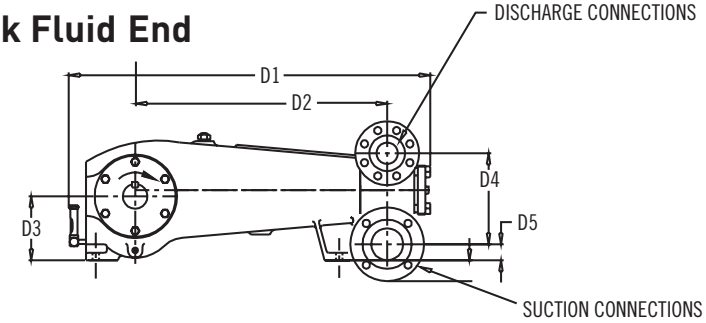

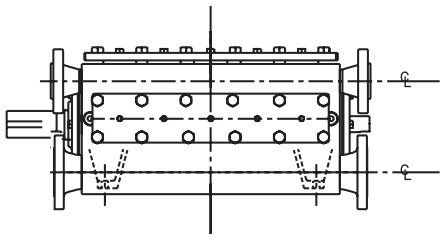

INSTALLATION, OPERATION, LUBRICATION, MAINTENANCE AND STORAGE INSTRUCTIONS

SAFETY

Electrical power or engine must be shut off completely before attempting service on the pump or its drive. Air surrounding the unit to be free of toxic, flammable, or explosive gases.

Tools needed should be planned for in advance (see valve seat pulling instructions) and should be clean and of adequate size. A torque-wrench will be required to tighten connecting rod cap screws.

A properly sized and set relief valve installed in the pump discharge system (ahead of any block valves) is necessary to protect personnel and to avoid dangerous overpressure. The relief valve set pressure should be not more than 25% above the design operating pressure and should discharge to tank or to the atmosphere (toward the ground) and must not be directed back to the pump suction system.

WARNING: Improper use of this equipment could result in loss of life.

CALIFORNIA PROPOSITION 65 WARNING:

WARNING: This product and related accessories contain chemicals known to the State of California to cause cancer, birth defects or other reproductive harm.

STORAGE

Pumps are shipped dry from the factory. If a pump has been in storage in a humid environment for more than 6 months the crankcase cover should be removed and carefully examined for rust or water collected in the power end. Flush out any evidence of rust or damage which exists, using a light clean oil.

Pumps to be placed in extended storage should be cleaned, repaired as needed and completely filled to the top with clean oil to prevent rusting. Rotate pump monthly 4-1/2 revolutions. Plug all openings to prevent air entry and oil leakage.

Fluid ends must be completely drained of water and suction and discharge ports blanked off. Store pump in a clean, dry location.

PUMP LOCATION AND PIPING DESIGN

Locate pump and driver in a clean, well-drained, ventilated and brightly illuminated area with adequate working spaces around the pump to provide ample access to fluid end, power end and associated drive elements. Do not expect good maintenance to result if the pump is positioned on muddy terrain or in a dirty, cramped, dimly-lighted area!

The supply tank(s) should be large to allow dissolved air and other gases to escape from the liquid and allow suspended solids to settle out before entering pump. A system employing dams and settling chambers is desirable.

CAUTION: All pumps should be installed level. For mobile applications the maximum angle of intermittent operation pumps (SC pumps) should be no more than 5 degrees in any one direction.

Pumps are not designed to withstand piping weight, vibration and the effects of thermal piping expansion/ contraction. Piping loads may be considerable and the weight of all valving, dampeners, filters and associated forces, moments and couples must be completely isolated. Use flexible hoses and rigid piping supports to isolate the pump and its driver from these effects.

SUCTION PIPING

No part of the piping system deserves more careful planning than the suction piping system. Suction piping must be short, direct and oversize. Use one pipe size larger than the pump suction connection. The shorter it is, the better! 1 to 3 feet per second suction velocity is acceptable.

Reference the following table to size a direct suction line from a tank to a pump.

Suction Piping		
2" – 2.5"	2.5" – 3"	3" – 4"
SC-80H	MA-45M	MA-75M
	SC-80	MA-75H
		SC-115
		SC-115L
		SC-115H

Use no elbows, tees, or restricted port valves in this line. Do not install orifice plates or positive displacement type fluid meters in the suction line which act as flow restrictors. Avoid the use of suction filters, if possible. Consider filtering the liquid as it enters the supply tank rather than as it leaves it. The use of an eccentric reducer with the flat side up located at the pump suction connection is recommended. The suction line should slightly rise from tank to pump and loops in which air may collect must be avoided.

The absolute pressure in a suction line may be less than atmospheric pressure and air may be "sucked" into the line unless all flanges and connections are airtight and watertight. If you can see water leaking out of a suction line when the pump is still, that may mean air is being sucked in when the pump is running.

Suction piping should be buried beneath the frost line or insulated to avoid freezing in the winter. If the suction line has a block valve at the supply tank, a suitable relief valve is suggested to relieve the suction piping from any possible dangerous overpressure from the discharge piping system.

Suction piping is often large, heavy (especially when filled with liquid) and tends to vibrate. Proper solid supports are recommended. A suction hose located near the pump will isolate these effects, protecting the pump from the forces and moments that piping weight creates.

New suction piping systems should be flushed free of pipe scale, welding slag and dirt before starting the pump. Hydrostatic testing to detect air leaks is advisable. Proper choice of suction hose construction is essential to avoid collapse of the hose liner.

Install a dry type compound gage in the suction line near the pumps which should fluctuate evenly. If violently pulsating, this gage indicates that the pump is not fully primed or that one or more valves are inoperative.

ACCELERATION HEAD

A characteristic of all reciprocating pumps is the imperative need to consider the effects of acceleration head which is a system related phenomenon. Acceleration head may be considered to be the loss of available hydraulic head (energy) in the piping system occurring because the demand by the pump cylinders for liquid is not smooth and even. Because the pump's demand for liquid is cyclical, the velocity of the liquid in the entire suction system is not truly constant but varies in response to the combined demand of the reciprocating plungers. Thus, liquid in the suction system is compelled to be accelerated and decelerated several times during each crankshaft revolution, depending on the number of plungers. Called "acceleration" head, this loss of available hydraulic head is proportional to:

(a) The speed (RPM) of the crankshaft

(b) The average liquid velocity in the piping

(c) The length of the suction piping

(d) The number of pumping chambers (triplex, etc.)

(e) The compressibility of the liquid

Thus, for a given pump, acceleration head effects may be reduced by the use of the shortest possible suction line, sized to reduce liquid velocity to a very low speed. This is often more economical than the use of charge pumps or expensive suction stabilizers.

NOTE: Charge pumps should be sized to 150% of rated pump volume. Charge pumps need to be centrifugals, not a positive displacement pump.

A charging pump is usually not a good substitute for a short, direct, oversize suction line, nor is it a substitute for the computation of available NPSH, acceleration head, friction head, vapor pressure and submergence effects duly considered. Required NPSHR of Myers Aplex Series pumps depends on speed, choice of plunger size and valve spring type. Consult Myers Aplex Series Engineering for help with your particular application. A full discussion of suction system losses is given in the Standards of the Hydraulic Institute, 14th Edition.

A common design mistake is the connecting of two (or more) reciprocating pumps to a common suction header. This is a profoundly complicated suction system, largely not amenable to mathematical analysis, and is frequently the cause of severe pump pounding, vibration and early valve failures. Each pump should be fed by its own separate, individual piping system, free from the effects of other pump cyclical demands for liquid.

DISCHARGE PIPING

A properly designed discharge piping system usually prevents the need of a pulsation dampener. The most common mistakes made in the design of the discharge piping system are:

1. Pumping directly into a tee or header. A "standing" wave (either audible or sub-audible) then often occurs. If flow must enter a header, use a 45º branch lateral (or equivalent) to avoid a reflecting surface from which sound can reflect.
2. Pumping into short radius 90º elbows. Instead, use two 45º elbows spaced 10 or more pipe diameters apart.
3. Pumping into a right angle choke valve.
4. Pumping into too small piping line size. Piping should be sized to keep fluid velocity below 15 feet per second, max.
5. Pumping through an orifice plate, small venturi, or reduced port "regular opening" valve.
6. Pumping through a quick closing valve, which can cause hydraulic shock (water-hammer).

A good discharge piping system includes:

1. A properly sized, correctly set relief valve. Discharge from relief valve returned to tank (not to pump suction).
2. A full opening discharge gate or ball valve. Avoid restricting plug valves, globe valves and angle valves.
3. A pressure gauge with gage dampener or snubber. Consider a liquid filled gauge. (Scale range to be double the normal pump operating pressure.)

Locate the relief valve and pressure gauge ahead of any block valve and so that the pressure in the pump

is always reflected at the relief valve. The relieving capacity of the relief valve must exceed the capacity of the pump to avoid excessive pressure while relieving. Use a full size relief line.

To minimize vibration (whether hydraulic or mechanical), discharge lines should be kept short, direct, well supported and solidly anchored. Avoid "dead" ends and abrupt direction changes.

BYPASS PIPING

Some designers ignore this important aspect of proper design of pump piping systems.

A reciprocating pump, especially after maintenance of the valves or plungers, starts with one or more fluid chambers full of air. Pumps operating on propane, butane, or other volatile liquids start with vapor in the fluid chamber(s).

Positive displacement pumps do not automatically purge themselves of air and gas after shutdown. For example, a quintuplex plunger pump will, after servicing, expel the air in four of the five pump chambers. Thus, the pressure from four of the "active" cylinders will keep shut the discharge valve of the "inactive", or "air bound," cylinder. Then, the air or gas in this cylinder will be compressed and expanded by its reciprocating plunger and never leave the chamber. Similar effects occur in duplex and triplex pumps.

To overcome these difficulties, adequate provision for expelling the gas in the "air bound" cylinders must be present. Common practice is to totally relieve the pump of all discharge pressure during the start-up, after servicing.

Consider the operational advantage of a full-sized bypass line (return to tank) which substantially removes discharge pressure from all cylinders during the start. This requires a block valve on the discharge side and a full opening bypass valve on the other side.

For economy, the bypass (to tank) can be combined with the relief valve discharge line. This line must be full-sized, well supported, and sloped downward to avoid freezing in cold weather. (A frozen relief valve line provides no protection to either the pump or operating personnel!)

The ability of a reciprocating pump to be "self-priming" depends on the ratio of the swept (displaced) volume in the cylinder to the unswept (clearance) volume at the end of the stroke. This depends on the design of the fluid end and on the plunger size selected.

Choice of the largest size plunger for a particular fluid end improves this compression ratio and so leads to "self priming", or easy priming. Choice of the minimum size plunger sometimes leads to difficulties, especially with pumps that require frequent servicing, or which handle volatile liquids, or which contain substantial amounts of dissolved air or gas. An automatic bypass and purging system for these applications may be merited.

LUBRICATION

Pumps are shipped without oil from the factory. If the pump is fitted with a planetary gear reducer, it must be filled separately through its own fill port. Gear reducers should be filled to approximately the halfway point.

Myers Aplex Series pumps utilize S.A.E. 40 wt. non-detergent oil in the crankcase. This oil requires only a non-foaming additive and should possess good water separation (anti-emulsion) characteristics. Such oils are often labeled "industrial" or "turbine" quality lubricants. If these oils are not available, a good quality gear oil or EP oil may be substituted. See lubrication guidelines.

In temperate climates, oil viscosity selected should fall between 70 and 84 seconds Saybolt viscosimeter at 210º F. In arctic service, low pour point oils are needed.

After the first 500 hours of operation in a new pump, drain the oil. Refill with clean, fresh oil. Thereafter, change the oil every 1,500 hours or sooner if it becomes contaminated with water or dirt. Fill to the center of the sight gage. Recheck after starting, adding oil to center of gage while running.

The table below shows the quarts of oil needed for each pump.

Quarts of Oil		
8	12	15
MA-45M	MA-75L	SC-115
SC-80	MA-75M	SC-115L
SC-80H	MA-75H	SC-115H

V-BELT DRIVE

A properly designed, well-aligned V-belt will provide years of reliable, economical service if properly tensioned and kept dry, free of oil and ventilated.

Alignment is critical for long life. If the shaft axes are not truly parallel, or if the sheave grooves are not positioned in good alignment, some belts will carry most of the load, resulting in their disproportionate load share and may actually twist or turn over in the groove. Use a straight edge across the rim of the sheaves to detect and correct for misalignment.

After about one week of operation, new V-belts will have stretched somewhat. The motor must be moved on its slide base to re-establish proper belt tensioning.

SUGGESTED PIPING SYSTEM FOR PLUNGER PUMPS

NOTES

1) CENTERLINE OF PUMP SUCTION (INLET) TO BE SLIGHTLY HIGHER THAN CENTERLINE OF SUCTION (INLET) VALVE-SO ANY AIR IN SUCTION SYSTEM PROMPTLY REACHES THE PUMP AND IS EXPELLED.

2) SLOPE BY-PASS SO LOW POINT DRAIN WILL FULLY EMPTY RELIEF AND CHOKE VALVES AND ALL LIQUID IN BY-PASS CIRCUIT.

3) DO NOT LOCATE PIPING OR OTHER EQUIPMENT IN FRONT OF OR ABOVE PUMP LIQUID END-PREVENTING SERVICING.

4) LOCATE CHARGING PUMP AT POINT SHOWN-IF A CHARGING PUMP IS NECESSARY (AS FOR VOLATILE FLUIDS, FOR EXAMPLE.)

5) IF DESIRED, A TWO-WAY MOTOR-OPERATED BY-PASS VALVE MAY BE USED RATHER THAN A MANUAL TYPE. IT SHOULD BE DESIGNED TO OPEN AUTOMATICALLY WHILE STARTING OR STOPPING.

6) FEED LINE AND BY-PASS LINE SHOULD FEED LIQUID INTO TANK BELOW MINIMUM LIQUID LEVEL.

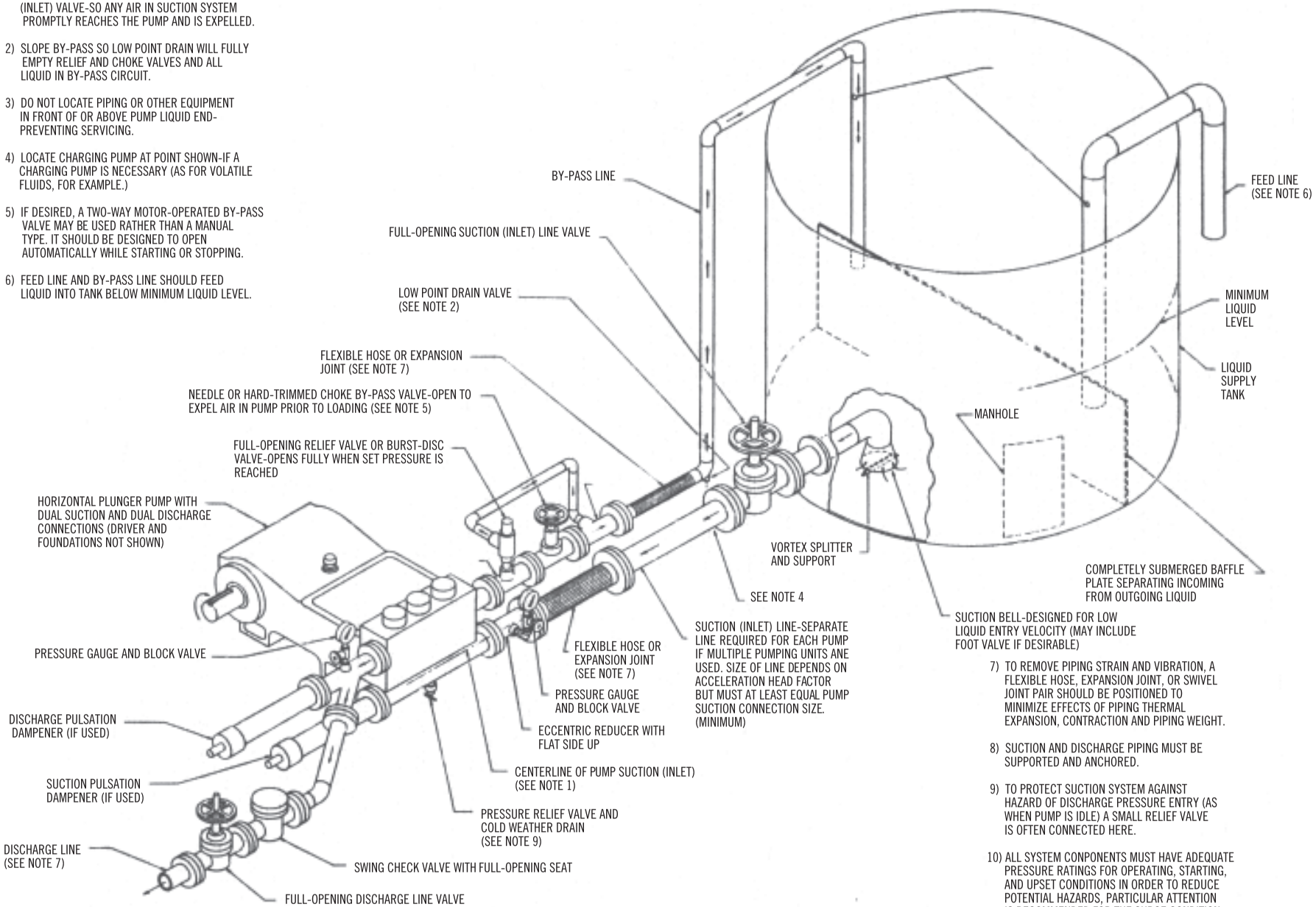

7) TO REMOVE PIPING STRAIN AND VIBRATION, A FLEXIBLE HOSE, EXPANSION JOINT, OR SWIVEL JOINT PAIR SHOULD BE POSITIONED TO MINIMIZE EFFECTS OF PIPING THERMAL EXPANSION, CONTRACTION AND PIPING WEIGHT.

8) SUCTION AND DISCHARGE PIPING MUST BE SUPPORTED AND ANCHORED.

9) TO PROTECT SUCTION SYSTEM AGAINST HAZARD OF DISCHARGE PRESSURE ENTRY (AS WHEN PUMP IS IDLE) A SMALL RELIEF VALVE IS OFTEN CONNECTED HERE.

10) ALL SYSTEM CONPONENTS MUST HAVE ADEQUATE PRESSURE RATINGS FOR OPERATING, STARTING, AND UPSET CONDITIONS IN ORDER TO REDUCE POTENTIAL HAZARDS, PARTICULAR ATTENTION IS RECOMMENDED FOR THE SURGE CONDITION THAT WILL RESULT DOWNSTREAM OF THE RELIEF VALVE WHEN NORMAL DISCHARGE IS BLOCKED.

Insufficient tension results in slippage, burning, squealing (especially during starting) and shortened belt life. Overtightening imposes excessive loads on pump and motor bearings and can cause early shaft fatigue failure.

Use the following table in adjusting V-belt tension:

Belt Cross-Section	Tension at Mid-Span	
	New Belts	Used Belts
"B"	5 – 6 lb.	3-1/4 – 5 lb.
"C"	9-3/4 – 13 lb.	6-1/2 – 9-3/4 lb.
"3V"	4 – 10 lb.	3 – 7-1/2 lb.
"5V"	17 – 30 lb.	13 – 23 lb.

Applying the above forces with a small spring scale, adjust motor position to provide the following deflection at mid-span:

Approx. Center Distance (Span), inches	Deflection, inches
16"	1/4"
22"	3/8"
28"	7/16"
32"	1/2"
40"	5/8"
48"	3/4"
60"	15/16"

Belts must be matched in pitch length. If one or two belts are slack, when the others are correctly tensioned, investigate for possible reasons. Correct any misalignment or lack of matching so each belt will transmit its load share.

Sheaves must be balanced to prevent abnormal vibration. Balancing weights must not be removed. Type "QD" sheaves must be evenly tightened on their tapered hubs to avoid rim wobble and severe lateral vibration. V-belts which snap and jerk will produce abnormal vibration and loads on both pump and motor or engine.

Run the pump several minutes at full load with belt guard removed, observing for uneven motion on the belt slack side, especially.

When an old V-belt drive becomes unserviceable, replace all belts, not just the broken or cracked belts. Do not operate belts on sheaves having worn, rusted, greasy or broken grooves. Shut off power to driver before servicing drive or pump.

WARNING: Do not operate without appropiate guards in place.

DIRECTION OF ROTATION

Before placing pump in operation, check that crankshaft rotation agrees with the arrows cast on top of the power frame by briefly jogging the electric motor. Crankshaft rotation must be clockwise as viewed from the right side of pump.

If pump is gear driven, remember that the pinion shaft turns opposite the crankshaft, if using a single-reduction geared drive or in the same direction as the crankshaft when using a planetary gear.

AUTOMATIC (SAFETY) SHUTDOWNS

Carefully check all electric shutdown devices present, such as crankcase oil level, discharge pressure, vibration, lubricator oil level, motor thermostat, etc.

CRANKSHAFT ASSEMBLY

GENERAL

Myers Aplex Series quintuplex crankshaft suspension utilizes two single-row tapered bearings, which are shim adjusted to provide the correct running clearance and two journal bearings on either side of the center connecting rod.

Thorough cleaning of all components prior to assembly is essential.

Power frame, shaft, bearings and retainer **MUST** be scrupulously scrubbed with clean solvent (such as kerosene) before starting. Remove any oil, dirt, rust and foreign matter which might prevent the correct fit up.

Crankshaft journals are critical. Remove all burrs, rust spots, and nicks, paying special attention to the ground areas on which bearings and oil seals operate.

TAPERED ROLLER BEARINGS

Shaft and frame tolerances provide a tight (press) fit on the shaft and tap fit in the frame. The best way to install the cone assembly (consisting of the inner race, cage and rollers) on the shaft is to heat the cone assembly in an electric oven for 30 minutes at 300 to 400°F. No More! (Do not heat bearings with an acetylene torch. This ruins the bearings!) Using clean, insulated gloves, remove the hot cone assembly from the oven, promptly dropping it on to the shaft.

The cone assembly must contact the seat thrust face (not be cocked) and the large end of the rollers must be down. Do not hammer on the bearing. The soft steel cage is easily distorted, ruining its function as a roller separator and guide against skewing. If the cone does not contact its thrust face properly, it must be pressed into place using a specially machined sleeve (which does not touch the soft steel cage). A hydraulic press is recommended if this difficulty arises.

CENTER BEARINGS

The two center bearings are pressed into the powerframe bore, one from the right and one from the left. The drilled indentation on the bearing must be aligned with drilled and tapped hole in the back of the power frame. After the bearing is pressed into place, this indentation must approximately line up to allow use of the locking set screw. Press into place until the flange on the bearing faces out on the counter bore in the powerframe. This ensures the bearing is not cocked. After the bearings are in place, lock them with the set screw.

INSTALLING CRANKSHAFT

GENERAL

Stand the power frame casting on the floor or on a bench with the fluid end face down and crankshaft end up. Insert one bearing cup in the left frame cup bore and shoulder it against the bearing retainer with a rubber mallet. Pass the crankshaft through the right frame bore. Pass the crankshaft through the center bearings and against the installed cup until the bearing cone seats into the left bearing cup. Insert a second bearing cup over the right hand crankshaft journal. Install O-Ring on the crankshaft extension guard. Tap the guard over the crankshaft extension if an auxiliary drive is not being used.

SHIM ADJUSTMENT OF TAPERED ROLLER BEARINGS

To provide for crankshaft thermal expansion, sufficient shims (located beneath bearing retainer flange) must be installed to provide .005" to .015" lateral end play, when shaft is cold.

Separate the shims set (which consists of two .020"; three .007"; and three .005" thick shims). Select one .020" shim and the bearing retainer and position them over the bearing retainer.

Insert two of six hex head cap screws 180º apart and tighten alternately until the bearing cup is seated. Place a magnetic base indicator on the exposed end of the crankshaft with indicator spindle against the side of power frame. Move crankshaft laterally with a pry bar first left and then right, observing movement indicated in each direction. The lateral end play should be only .005" to .015". Remove the bearing retainer and add shims as needed. Repeat the procedure above until the proper end play tolerance is obtained. Install the remaining four cap screws.

The recommended tightening torque for bearing retainer 1/2"-13UNC cap screws is 59 to 72 Ft. Lb.

INSTALLATION OF CRANKSHAFT OIL SEAL

Insert oil seal over the end of crankshaft and position it into the oil seal bore in the power frame or bearing retainer. Using a rubber mallet, tap it into the bore until the face of the seal is flush with the power frame or bearing retainer.

CONNECTING ROD, CROSSHEAD AND CROSSHEAD PIN ASSEMBLY:

GENERAL

Myers Aplex Series connecting rod assemblies employ precision automotive type steel-backed, babbitt-lined crankpin bearing halves which require no shims for clearance adjustment. This pump employs full-circle (piston type) crossheads.

Plungers are provided with a knurled wrenching area to permit tightening of the tapered thread into the crosshead, establishing accurate alignment while affording easy field installation.

Before beginning the assembly all parts must be scrupulously cleaned, removing all oil, dirt, rust and foreign matter which prevent proper fitting, or which might tend to score the rubbing surfaces. Clean and examine the power frame bores for scoring and abnormal wear, especially wear of the lower crosshead guide way. Hone smooth, if rough.

Measure the bores of the frame using inside micrometers to determine abnormal frame wear if any.

New Crosshead OD: 3.243/3.246 New Frame Bores: 3.253/3.250	New Crosshead OD: 3.996/3.993 New Frame Bores: 4.000/4.004
MA-45M	MA-75L
SC-80	MA-75M
SC-80H	MA-75H
	SC-115
	SC-115L
	SC-115H

Frame bores which have become worn more than .015" must be sleeved with a cast iron liner to re-establish correct geometry and alignment. Contact Myers Aplex Series concerning the repair of badly worn frame bores.

Smooth any rough corners and edges on the crosshead skirts, using fine emery cloth. Examine and clean the female tapered threads and wrist pin holes.

INSTALLING WRIST PIN BUSHINGS

The wrist pin bushing is precision machined bearing bronze which is press fitted into the eye of the connecting rod.

Bushing O.D.: 1.378/1.377 Connecting Rod Eye Bore: 1.3750/1.3760	Bushing O.D.: 1.6280/1.6270 Connecting Rod Eye Bore: 1.6250/1.6260
MA-45M	MA-75L
SC-80	MA-75M
SC-80H	MA-75H
	SC-115
	SC-115L
	SC-115H

Carefully align the bushing with its hole and after applying oil to bushing O.D. use a hydraulic press to force it home. When a bronze bushing is pressed into place, the I.D. (bore) of the bushing is reduced somewhat, owing to the extent of press fit. Therefore, a clean, new wrist pin should be inserted into the bushing bore to establish that running clearance has been obtained. The running clearance between the wrist pin and installed bushing is:

New Pin OD: 1.0640/1.0635 Installed Bushing Bore: 1.0645/1.0650	New Pin OD: 1.3140/1.3135 Installed Bushing Bore: 1.3145/1.3155
MA-45M	MA-75M
SC-80	MA-75L
SC-80H	MA-75H
	SC-115
	SC-115H
	SC-115L

Oil Clearance.....0005/.0015"

Replacement bushings are furnished pre-bored by Myers Aplex Series which usually eliminates the need to ream the installed bushing bore. However, due to slight variations in finishes and tolerances, it sometimes happens that more than predicted contraction of the I.D. occurs. This occurrence results in a slight interference which may be eliminated by lightly honing the bore of the bronze (not by reducing the pin size!) An automotive engine repair shop usually is equipped with power honing machines capable of smoothly finishing the bushing bore. Bore of bushing must be round and free of taper.

PINNING THE CROSSHEAD

A pressfit is employed between the crosshead pin and crosshead to secure the pin against any motion. A hydraulic press is employed to force the pin thru the bosses of the crosshead.

A mishap during insertion can occur causing the ruin of the pin or the crosshead, if during application of pressure:

(a) Pin is not aligned absolutely square with the crosshead.

(b) Crosshead is not supported on v-blocks so it can roll while under load.

(c) Connecting rod is not fully supported so pin cannot enter the bushing without damage to it. This will damage the bushing.

(d) Failure to oil pin O.D. and crosshead bores, to prevent galling. Use clean motor oil.

After installing the pin, carefully check the crosshead O.D. to see if it is out-of-round. If so, a smart blow with a rubber mallet will restore the crosshead O.D. into its original roundness.

ORDER OF ASSEMBLY

The connecting rod/crosshead assembly is installed after the assembly of the crankshaft. The rod and crosshead will pass through the wiper box wall bore. With the frame in the horizontal position, load the rods through the cradle.

PRECISION CRANKPIN (CRANKTHROW) BEARINGS

Myers Aplex Series pump crankpin bearings require no shimming to establish correct running clearance. Precise machining of the connecting rod, caps and crankpin journals is necessary to achieve this convenience.

New Crankpin O.D.: 2.250/2.249 New Connecting Rod Bore: 2.3944/2.3955	New Crankpin O.D.: 2.749/2.748 New Connecting Rod Bore: 2.941/2.942
MA-45M	MA-75L
SC-80	MA-75M
SC-80H	MA-75H
	SC-115
	SC-115L
	SC-115H

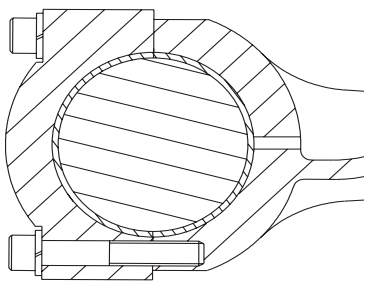

Crankpins which are worn out-of-round, tapered, or badly scored should either be discarded or perhaps salvaged by grinding undersize, hard chrome-plated, and finish ground to above diameter. Connecting rod/cap bore must be perfectly round and within above sizes and free of taper. Discard if elliptical or tapered as the result of abnormal heating. Each cap and rod is

match-marked for correct identification. Take care that each cap is re-installed properly with its companion rod. Bearing halves are identical and are prevented from rotating by tongues which fit into slots in the cap.

Check that all oil holes are clean and fully open. Grit is the greatest enemy of bearings, however precisely manufactured. Hence, all surfaces must be perfectly clean and lightly oiled prior to assembly. Remove any burrs or sharp corners which prevent the perfect fitting of these precision bearings. Using a torque wrench, tighten cap bolts as follows:

Thread Size: 5/16" – 18UNC Tightening Torque: 19 Ft. Lb.	Thread Size: 3/8" – 16UNC Tightening Torque: 26 Ft. Lb.
SC-80	SC-115
SC-80H	SC-115H
MA-45M	SC-115L
	MA-75M
	MA-75H
	MA-75L

Specified torque, applied to clean, well-oiled threads and bearing faces, will create tensile stresses in the cap bolts from 90,000 to 110,000 psi, approximately and will provide correct initial tension. Myers Aplex Series pumps utilize high strength cap bolts suitable for these initial loadings, maintained by hardened spring lockwashers.

After all rods and caps are secured, slowly turn the crankshaft to be sure no bearing is in a bind.

Using a flashlight, examine the location of each connecting rod (eye end) within its crosshead. Rods must not touch any crosshead boss or skirt.

WIPER BOX ASSEMBLY

GENERAL

Extension rod wiper boxes (sometimes referred to as the diaphragm stuffing box, or stripper housing assembly) serve two important functions: retention of crankcase oil in the power end and exclusion of dirt and water.

Myers Aplex Series has developed a unique sealing set which operates on a hardened and ground stainless steel extension rod (often called "pony" rod), and a rubber baffle disc affording protection against leaking plunger packing. The seals require no adjustment, only correct and careful assembly.

"POLY PAK" SEAL

This seal keeps oil from leaking out of the powerframe. Developed by the Parker Seal Group, this patented rod seal employs a soft nitrile rubber O-Ring to energize a special hard polyurethane "Molythane" shell by forcing the inner lip against the rod and the outer lip against the housing bore, as shown.

The "Poly Pak" seal is inserted into its counter bore with its lips directed toward the oil in the crankcase. (Will not work if installed backwards!)

MECHANICAL OIL SEAL

The oil seal is to keep contamination out of the powerframe. With the box positioned in a hydraulic press,install the backup seal against the "Poly Pak" seal, with the lips of both seals facing downward.

The mechanical seal contains a garter spring. Check to see that this spring is still properly located and in its position. The mechanical seal has a metal case which serves to force the "Poly Pak" seal into its cavity, energizing its lips. Apply oil lightly to the bore of the box before pressing each seal into its counterbore.

INSERTING THE PLUNGER

Insert the integral extension rod plunger through the fluid end and through the stuffing box. Insert the extension rod through the wiper seals with the tapered thread and entering first**.** Next, install rubber baffle plate by oiling the extension rod portion of the plunger. This baffle plate seats into a reduced diameter next to the knurled shoulder. Care should be used in moving the male tapered thread through wiper seals to prevent dislocating the garter spring or damaging seal lips.

Fasten the wiper box to the power frame by evenly tightening the two nuts on the wiper box studs. Oil leakage between frame face and wiper box is prevented by an O-Ring on the O.D. of the wiper box.

With extension rod inserted through the wiper box seals, thread the tapered threads (must be clean!) into the tapered crosshead female threads. Firmly tighten, apply wrench to the knurled area only. Never damage the extension rod ground surfaces!

STUFFING BOX, PACKING AND PLUNGER ASSEMBLIES

GENERAL

Myers Aplex Series pumps all feature field removable and replaceable stuffing boxes. These pumps also have integral extension rods. The plungers may be removed separately (without box removal) to facilitate re-packing. The integral extension rod type plunger may be removed by removing the cylinder head plug

and retainer plate allowing the plunger to be removed through the fluid end, after unscrewing it from the crosshead. It is not necessary to disturb the fluid end or piping.

SPRING LOADED PACKING

Note that the gland is screwed tightly onto the box and contacts its face. The spring is providing all of the initial compression and adjustment. No adjustment is provided by the gland.

Since the force exerted by the spring is contingent on the space provided for it, the correct lengths of all rings is essential for good tensioning.

Spring:

A stiff Inconel spring, which closely fits the bore of the stuffing box, is used in this assembly. This spring is compressed in a vise to the operating length required plus 0.25" and tied with waxed nylon spot tie cord. The cord is looped over the ends of the spring through the coils and tied to maintain the length mentioned above. Each spring is assembled into the stuffing box. Note that the spring does not contact the plunger.

Spring-Guide Ring:

Plungers are heavy and the importance of a well-fitted guide ring which carries this weight is often overlooked. Discard any guide ring which becomes worn or scored, as it will then not serve its purpose. It should fit snugly in the box. Apply oil generously to this ring.

Spring Loaded Packing:

Three rings of chevron or compression packing are installed next. For compression packing, install them with the skive intersections 180º apart to discourage leaking.

Gland Ring:

This ring also fits the plunger and helps support the plunger weight. Discard it if bore is worn, rough or out-of-round. Lightly oil the ring before insertion.

HI/LO GLAND ADJUSTABLE PACKING

The Myers Aplex Series Hi/Lo adjustable packing was designed to provide sealing of the plunger in either high or low pressure operation. The packing is non-lubricated and user adjustable.

If the packing begins to wear and leak (liquid running out of the cradle drain hole) the gland can be tightened. Tightening will increase packing preload and will control leakage. Adjustments (with the pump running) should be in 1/2 to 1/6 of a turn of the gland nut. There are 6 gland adjustment holes on the nut, so 1/2 to 1 hole rotation will be desirable.

When a bentonite slurry is being pumped, it is normal for a "Putty" like material to collect at the packing plunger interface. This is nothing more than bentonite with most of the water evaporated. As this material begins to collect, this is the first sign that the packing could be adjusted. Over-tightening will unnecessarily shorten packing life.

The Hi/Lo packing is totally retrofitable to existing Myers Aplex Series pump. Use the drawing for proper reassembly order.

Initial gland tightening should be 2 to 2-1/4 turns past hand tight. If there is a grease fitting in the stuffing box, remove it, use a 1/8" pipe plug and plug the hole. (Caution, make sure the plug does not protrude down into the ID of the stuffing box. If the plug is too long, grind off the end and try again.)

INSERTING THE PLUNGER

Apply oil liberally to plunger O.D. and lightly tap it through the packing. When introducing the plunger through the stuffing boxes, also apply oil liberally to the O.D. of each integral extension rod to allow easy passage through the wiper box seals.

A soft rubber mallet is recommended to avoid any damage to the plunger face or its threads. Remember: The fragile nature of packing rings and plunger surfaces deserve your respect and avoidance of careless damage to these key elements!

INSTALLING THE GLAND

Considerable downward pressure on the gland is required to compress the spring and to move the packing into location, and to start the threads of the box.

Once the gland threads are started, screw it down completely until it makes up tightly against the face of the box for spring loaded packing. For Hi/Lo, J-Style or gland adjusted packing, tighten the gland until it is seated firmly against the packing.

INSTALLING THE LIQUID END

The two double-ended studs should be installed into the power frame from the liquid end side before bolting the liquid end up. The fluid end is retained on the power end by two socket head cap screws. No dowel pins or other alignment techniques are needed since the power frame provides alignment to the stuffing boxes individually. These two cap crews should be left loose until the dowel pins in the stuffing boxes locate properly in the liquid end. After this is accomplished tighten the outer screws. These two screws should be tightened before the stuffing boxes.

The torque value for each pump should be as follows:

3/4" – 10UNC at 160 Ft. Lb	7/8" – 9UNC at 250 Ft. Lb.
MA-45M	MA-75L
SC-80	MA-75M
	MA-75H
	SC-115
	SC-115L
	SC-115H

INSTALLING THE STUFFING BOX

Myers Aplex Series stuffing boxes derive their alignment from the bores of the power frame and the faces of the fluid end, so these surfaces must be cleaned of rust, scale and dirt before assembly is begun. Wash all contacting surfaces with clean solvent and dry with a clean shop towel.

A nitrile rubber seal is used to seal between the face of the fluid end (must be flat, clean and smooth) and the face of the box. Replace if damaged.

The fluid end is retained on the power end by two socket head cap screws. No dowel pins or other alignment techniques are needed since the power frame provides alignment to the stuffing boxes individually. These two screws should be tightened before the stuffing boxes. The torque value for each pump should be as follows:

3/4" – 11UNC at 160 Ft. Lb.
SC-80H

All stuffing boxes are retained by large bolts which extend through the liquid end, serving to clamp the box tightly against the fluid end face.

Using a socket extension and torque wrench, tighten clean, well-oiled threads and nut faces as follows:

Long Screws Stuffing Box		
5/8" – 11UNC at 75 Ft. Lb.	5/8" – 11UNC at 100 Ft. Lb.	3/4" – 10UNC at 125 Ft. Lb.
MA-45M	SC-80H	MA-75L
SC-80		MA-75M
		MA-75H
		SC-115
		SC-115L
		SC-115H

Snug up all the long screws before tightening the nuts on the two center studs inside the cradle.

Failure to fully and evenly tighten these studs (or cap screws) can lead to early failure, plunger mis-alignment and failure, and short packing life. Retighten after 500 hours of operation.

CONNECTING THE PLUNGER

Install the rubber baffle on to the integral extension rod, sliding it against the knurled shoulder of the plunger. Roll the pump crankshaft slowly until the plunger male threads touch the mating female threads in the crosshead.

Applying a pipe wrench to plunger knurled area, thoroughly tighten the connection. Do not use a "cheater" when connecting plunger to extension rod. (Serves no useful purpose and may damage the connection!)

PACKING

Packing life for Aramid fiber packing may be improved in some applications by regular, systematic lubrication. An optional force feed lubricator assembly is often recommended, especially for pumps on continuous duty. This provides regular, controlled supply of lubricant, lowering friction and heat.

Additionally, the regular application of the correct lubricant aids dissolving of salt and gyp tending to build up on the plungers in produced water applications. For this service, Rock Drill Lubricant is a popular and effective packing lubricant.

Plungers in CO_2, ethane, or other very cold liquid services may use brake fluid. This fluid does not congeal into a solid which cannot enter the packing. Consider the use of an air-sealed cradle into which dry (instrument) air may be directed, excluding the moisture which causes plunger icing especially in very humid conditions.

Packing lubricant for pumps on light hydrocarbons, hot water, lean oil, naphtha, or gasoline often require experimentation.

A good start is to use steam cylinder oil. Castor oil is sometimes successful as a packing lubrication for liquid propane and butane services, at ambient temperature.

In pumps placed in arctic service, a special low pour point oil is indicated.

Packing lubrication is not permitted on some services, such an amine, food stuffs, etc. and other packing styles and materials may be required.

PLUNGERS

Myers Aplex Series offers its own unique product: the Myers Aplex Series "Rokide" plunger. This premier quality plunger consists of a chromium oxide deposition on a solid stainless steel body.

Ordinary handling will not damage this fine product. Avoid striking the coated surface (black) during

installation. Apply light forces only on the ends of the plunger. Do not hammer or pry.

All threads on Myers Aplex Series plungers must be cleaned and oiled before assembly. Stainless steel (although very corrosion resistant) has a tendency to gall and seize. To avoid this, an anti-seizing lubricant is well worth its use. Apply oil to the threads.

Myers Aplex Series can supply solid ceramic plungers on order. This plunger is very fragile, vulnerable to thermal and mechanical shock, and must be handled with the greatest care. Use only a rubber mallet to insert it into the packing. Other plunger types are available upon request.

CONVERTING PLUNGER TO PISTON

DISASSEMBLY

1. Remove the 8 cap screws and the cylinder head retaining plate from the front of the liquid end.
2. Unscrew the 3 glands from the stuffing boxes and remove. Unscrew the 3 plungers from the crossheads and work them gently through the wiper box seals and plunger packing. Pull them out the front of the pump.
3. Pull the stuffing box retainer plate to the back of the cradle and remove the 3 stuffing boxes.

REASSEMBLY

1. Install the 3 liners in place of the stuffing boxes. The milled flat spots must be aligned to get the liners in the powerframe.
2. Pull the stuffing box retainer plate over the 3 liners.
3. Snap the piston cup over the piston hub. Assemble the piston rod, O-Ring, piston assembly, piston keeper and nylock socket head cap screw (12mm hex) together.
4. Insert the entire piston assembly through the liquid end, liner and wiper box and screw into the crosshead. Once it is assembled you can tighten the nylock screw into the piston rod.
5. Reinstall the cylinder head retainer plate and 8 cap screws. Torque in an even manner as shown in the service manual.

CHANGING PISTON CUPS

1. Remove the 8 cap screws and the cylinder head retaining plate from the front of the liquid end.
2. Unscrew the nylock socket head cap screw (12mm hex) and remove with piston keeper.
3. Screw a 5/8"-11UNC all thread stud into the piston hub and remove from liner. Make sure the O-Ring comes out also.
4. Change piston cup and reinstall with a new O-Ring and nylock screw. Inspect the piston hub for wear. It should be changed periodically.
5. Reinstall the cylinder head retainer plate and 8 cap screws.

DUAL-STEM GUIDED AND DISC VALVE SYSTEMS

GENERAL

Myers Aplex Series has developed a unique setting/puller system permitting quick, easy and safe methods of installing and removing tapered seat valves.

The system allows servicing without distortion of the seat, with minimum effort and no damage to fluid end tapers or seat.

Tapered seats notoriously drive solidly down into mating deck tapers, so firmly that extraction heretofore has always posed severe problems. Old style valves may be pulled only with the greatest effort, using "J" puller heads (prone to failure), CO_2 – Dry Ice, and other improvisations.

DISC VALVE CONSTRUCTION

The Myers Aplex Series valve is a precision made sub-assembly utilizing threads cut into the rim of seat for use with Myers Aplex Series setting/pulling tool. These threads do not deteriorate as proven by field experience. By locating these on the rim setting/pulling forces are now applied only to the rim of the seat, never to the webs (or "spokes"), or to the center section. Distortion of the seat is eliminated.

Access to these seat threads is provided by the removal of the valve cage on D.S.G. valves or the spring retainer on Disc valves, which is screwed onto the seat. An anti-seizing lubricant applied to all threads is good insurance against future difficulty.

SETTING THE VALVE SEAT

Effective pressure-sealing between tapered (male) seat and tapered (female) fluid end deck is possible only if the tapers are absolutely clean and dry just prior to installation. Thoroughly clean surfaces using a clean solvent. Dry with a clean shop towel.

Examine the cleaned fluid end deck tapers, using a flashlight, and remove all deposits of gyp, salt, or

other encrustation. Lightly emery cloth any minor imperfections found in the deck taper.

INSTALLING THE VALVE SEAT

The puller stem and puller head are provided with tapered (locking) threads. Screw them together using two pipe wrenches applied to the knurled areas provided. Then, screw the valve seat onto the puller head by hand until it shoulders against the puller shoulder. Back off 1/16" of a turn. Do not tighten.

Lower the seat and tool into the fluid end, squarely setting the seat into the deck. Then strike the top of the stem with a 6 pound hammer until a solid metallic sound is heard, usually 2 or 3 blows. Unscrew the head and stem from the seat using a 1/2" bar (or screwdriver) in the hole provided at the top end of the stem.

INSTALLING O-RINGS, DUAL STEM GUIDED SPRING AND CAGE

Install Nitrile O-Ring over the threaded section of the seat and position it at the bottom of the threads. Install the polyurethane O-Ring into the valve and position it into the groove. Position the valve into the hole in the center of the installed seat. Install the valve spring. Apply anti-seizing lubricant to the threads of the valve cage and screw the cage on to the threaded valve seat with cage setting tool.

INSTALLING DISC, SPRING, DISC VALVES AND STEM:

Myers Aplex Series offers discs of acetal resin, of 17-4PH S.S. hardened and ground, and of titanium alloy.

Position the disc and Inconel spring on the seat, aligning the hole in the disc with the stem threads in the seat center.

The stem, spring retainer and locknut are shipped from Myers Aplex Series already assembled and tightened with a torque wrench with "thread lock" sealant added to the top stem threads only.

Torque 16 Ft. Lb.

Cleanliness of threads and other contacting surfaces is of paramount importance in the assembly of all valve elements.

PULLING THE VALVE SEAT

First drain the fluid end entirely. For D.S.G. valves, use the cage wrench to unscrew the cage from the seat. For Disc Valves unscrew the stem from the seat. Remove the cage, spring and valve from the fluid end. Attach the Myers Aplex Series puller head to the puller stem, tighten their tapered threads with a pipe wrench applied to the knurled areas of the puller stem and head. Lower the stem and head into the fluid end and engage the threads of the head onto the seat threads. Using a 1/2" bar (or screwdriver) rotate the head clockwise, thread it fully onto the seat but do not tighten.

REMOVING THE VALVE SEAT

Slide the bridge over the stem. Clean and oil the stem threads. Oil the face of the wing nut. Thread wing nut down onto the stem, seating it on the bridge top firmly. Extract the seat from the pump by striking the wing nut with a heavy hammer (a hydraulic ram may also be used). Stand clear of the pump when applying heavy tonnage, as the entire assembly will jump violently upwards when the pulling energy is suddenly released.

The Myers Aplex Series puller/setting tool and gage tool are custom designed and built for each specific Myers Aplex Series pump model. The same puller head is used on both suction and discharge seats. The bridge is made to fit each model and its proper use will not damage the valve cover gasket machined counterbore on the top of the fluid end.

TROUBLE LOCATION AND REMEDY

Trouble	Possible Cause	Remedy
Pump fails to deliver required capacity.	Speed incorrect. Belts slipping.	Change drive ratio or tighten belts (if loose). Correct motor speed.
	Air leaking into pump.	Seal with compounds.
	Liquid cylinder valves, seats or plungers worn.	Reface or lap valves and seats; replace packing or plungers.
	Insufficient NPSHA.	Increase suction pressure.
	Pump not filling.	Prime pump.
	Makeup in suction tank less than displacement of pump.	Increase makeup flow. Reduce pump speed.
	Vortex in supply tank.	Increased liquid level in supply tank. Install vortex breaker.
	One or more cylinders not pumping.	Prime all cylinders. Allow pump to operate at low pressure through bypass valve to eliminate vapor.
	Suction lift too great.	Decrease lift. Raise tank level.
	Broken valve springs.	Replace.
	Stuck foot valve.	Clean.
	Pump valve stuck open.	Remove debris beneath valve.
	Clogged suction strainer.	Clean or remove.
	Relief, bypass, pressure valves leaking.	Repair.
Suction and/or discharge piping vibrates or pounds.	Piping too small and/or too long.	Increase size and decrease length. Use booster pump. Use suction and/ or discharge pulsation dampeners.
	Worn valves or seats.	Replace or reface.
	Piping inadequately supported.	Improve support at proper locations.
Pump vibrates or pounds.	Gas in liquid.	Submerge return, supply or makeup lines in suction supply tank.
		If operating under a suction lift, check joints for air leaks.
	Pump valve stuck open.	Remove debris beneath valve.
	Pump not filling.	Increase suction pressure.
	One or more cylinders not pumping.	Prime all cylinders. Allow pump to operate a low pressure through bypass valve to eliminate vapor.
	Excessive pump speed.	Reduce. Check drive ratio.
	Worn valves or seats.	Replace or reface.
	Broken valve spring.	Replace.
	Loose plunger.	Tighten.
	Loose or worn bearings.	Adjust or replace.
	Worn crossheads or guides.	Replace.
	Loose crosshead pin. Loose connecting rod cap bolts.	Adjust or replace.
	Pump running backwards.	Correct rotation.

TROUBLE LOCATION AND REMEDY

Trouble	Possible Cause	Remedy
Consistent knock.	Water in power end, crankcase.	Drain. Refill with clean oil.
	Worn or noisy gear.	Replace.
	Worn or loose main bearing, crank pin bearing, wrist pin bushing, plunger, valve seat, low oil level. **NOTE:** High speed power pumps are not quiet. Checking is necessary only when the sound is erratic.	Adjust or replace. Add oil to proper level.
Packing failure (excessive).	Improper installation.	Install per instructions.
	Improper or inadequate lubrication.	Lubricate per instructions.
	Improper packing selection.	Change to correct packing.
	Scored plungers.	Replace.
	Worn or oversized stuffing box bushings.	Repair or replace. Check bore and outside diameter of bushings frequently. (Many times plungers are replaced and bushings ignored.)
	Plunger misalignment.	Realign. Plungers must operate concentrically in stuffing box.
Wear of liquid end parts.	Abrasive or corrosive action of liquid.	Check valves and seats frequently at start-up to determine schedule for replacing, etc. Eliminate sand, abrasive, air entering pump.
	Incorrect material.	Install correct materials.
Liquid end cylinder failure.	Air entering suction system.	Eliminate air. **NOTE:** Pitting often leads to hairline cracks which ends in cylinder failure.
Wear of power end parts (excessive).	Poor lubrication.	Replace oil as recommended in instructions. Keep oil clean and at correct temperature. Be sure oil is reaching all bearings.
	Overloading.	Modify pump or system to eliminate overload.
	Liquid in power end.	Drain power end. Eliminate cause or source of liquid entering power end. Relubricate.

TROUBLE LOCATION AND REMEDY

Trouble	Possible Cause	Remedy
Excessive heat in power end. (Above 180ºF.)	Pump operating backwards.	Correct rotation.
	Insufficient oil in power end.	Fill to proper level.
	Excessive oil in power end.	Drain to proper level.
	Incorrect oil viscosity.	Fill with correct oil.
	Overloading.	Reduce load.
	Tight main bearings.	Correct clearance.
	Drive misaligned.	Realign.
	Belts too tight.	Reduce tension.
	Discharge valve of a cylinder(s) stuck open.	Fix valve(s).
	Insufficient cooling.	Provide adequate cooling for oil or reduce ambient temperature.
	Pump speed too low.	Increase speed.

Power Frame Assembly; Connecting Rod, Crosshead & Wiper Box Assembly

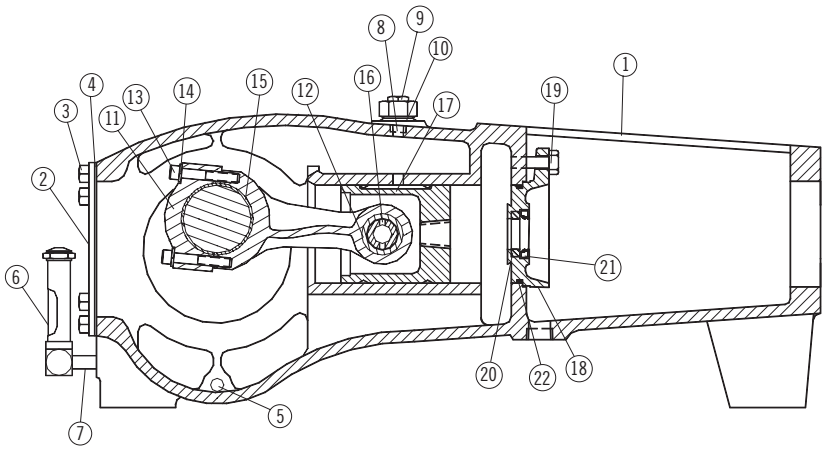

MA-45M			
Item	Quantity	Description	Part Number
1	1	Power Frame	7206-0053-51K
2	1	Crankcase Cover	7206-0049-00B
3	8	3/8" NC Hex Head Cap Screw x 5/8" Long	100-038058-273
4	1	Gasket, Crankcase Cover	7206-0050-00B
5	2	3/8" Pipe Plug, Square Head	170-038001-237
6	1	Oil Level Sight Gage	7602-3000-00A
7	1	1/4" Pipe Nipple, Std. Wt. – 2" Long	157-014112-235
8	3	1/8" Pipe Plug, Socket Head	170-018003-405
9	1	Breather, Crankcase, 3/4" NPTM	7602-3002-10A
10	1	1/2" Pipe Plug, Square Head, Steel	170-012003-237

MA-45M			
Item	Quantity	Description	Part Number
11	5	Connecting Rod sub-assembly, which includes:	7206-0003-00C
12	1	Wrist Pin Bushing	7206-0004-00A
13	2	Socket Head Cap Screw – 5/16" NC x 2" Long	105-516200-454
14	2	5/16" Reg. Spring Lockwasher	154-516059-244
15	5	Crankpin Bearing Pair	7206-0006-00K
16	5	Wrist Pin	7206-0005-00A
17	5	Crosshead	7206-0010-00C
18	5	Wiper Box	7206-0009-00B
19	10	Hex Head Cap Screw- 3/8" x 1-1/4" Long	100-038114-273
20	5	Polypak Ring	145-100112-999
21	5	Oil Seal	145-100158-999
22	5	O-Ring	0015100331

Power Frame Assembly; Connecting Rod, Crosshead & Wiper Box Assembly

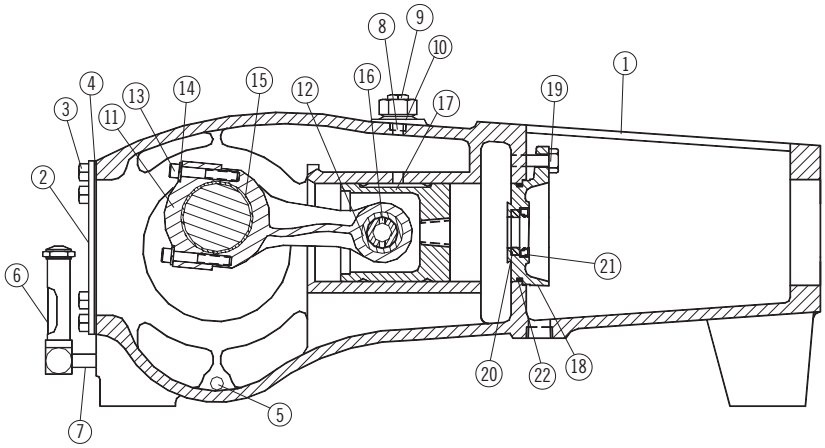

MA-75M			
Item	Quantity	Description	Part Number
1	1	Power Frame	7203-0251-00K
2	1	Crankcase Cover	7203-0244-00B
3	8	3/8" NC Hex Head Cap Screw x 5/8" Long	100-038058-273
4	1	Gasket, Crankcase Cover	7203-0253-00B
5	2	1/4" Pipe Plug, Square Head	170-014004-250
6	1	Oil Level Sight Gage	7602-3000-00A
7	1	Nipple, Pipe; Std. 1/4" NPT x 1-1/2"	157-014112-235
8	5	1/4" Pipe Plug, Socket Head	170-014003-405
9	1	Breather, Crankcase, 3/4" NPTM	7602-3002-10A
10	1	3/4" Pipe Plug, Socket Head, Steel	170-034003-237

MA-75M			
Item	Quantity	Description	Part Number
11	5	Connecting Rod sub-assembly, which includes:	7203-0104-00D
12	1	Wrist Pin Bushing	7203-0115-00A
13	2	3/8" NC x 2-1/2" Long, Socket Head Cap Screw	100-038212-454
14	2	3/8" Reg. Spring Lockwasher	05454A007
15	5	Crankpin Bearing Pair	7203-0160-00K
16	5	Wrist Pin	7203-0116-00A
17	5	Crosshead	7203-0105-00C
18	5	Wiper Box	7203-0108-00C
19	10	Hex Head Cap Screw – 1/2" x 1-1/2" Long	100-012112-273
20	5	Polypak Ring	145-114178-999
21	5	Oil Seal	145-114206-999
22	5	O-Ring	001500121

Power Frame Assembly; Connecting Rod, Crosshead & Wiper Box Assembly

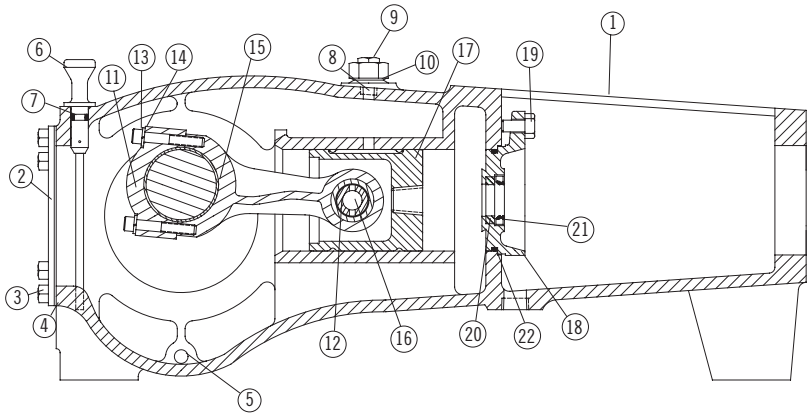

SC-80, SC-80H			
Item	Quantity	Description	Part Number
1	1	Power Frame	7206-0053-51K
2	1	Crankcase Cover	7206-0049-00B
3	8	3/8" NC Hex Head Cap Screw x 5/8" Long	100-038058-273
4	1	Gasket, Crankcase Cover	7206-0050-00B
5	2	3/8" Pipe Plug, Square Head	170-038001-237
6	1	Oil Level Dipstick	7206-0094-00A
7	1	O-Ring Size #2-203	110-000110-201
8	3	1/8" Pipe Plug, Socket Head	170-018003-405
9	1	Breather, Crankcase, 3/4" NPTM	7602-3002-10A
10	1	1/2" Pipe Plug, Socket Head	170-012003-237

SC-80, SC-80H			
Item	Quantity	Description	Part Number
11	5	Connecting Rod sub-assembly, which includes:	7206-0003-00C
12	1	Wrist Pin Bushing	7206-0004-01A
13	2	Socket Head Cap Screw – 5/16" NC x 2" Long	105-516200-454
14	2	5/16" Reg. Spring Lockwasher	154-516059-244
15	5	Crankpin Bearing Pair	7206-0006-00K
16	5	Wrist Pin	7206-0005-00A
17	5	Crosshead	7206-0010-00C
18	5	Wiper Box	7206-0009-00B
19	10	Hex Head Cap Screw- 3/8" x 1-1/4" Long	100-038114-273
20	5	Polypak Ring	145-100112-999
21	5	Oil Seal	145-100158-999
22	5	O-Ring	001500331

Power Frame Assembly; Connecting Rod, Crosshead & Wiper Box Assembly

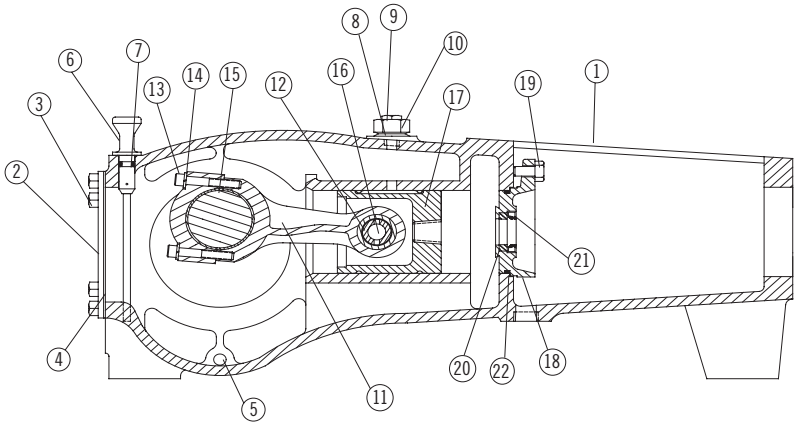

MA-75L, SC-115L			
Item	Quantity	Description	Part Number
1	1	Power Frame	7203-0322-00K
2	1	Crankcase Cover	7203-0244-00B
3	12	3/8" NC Hex Head Cap Screw x 5/8" Long	100-038058-273
4	1	Gasket, Crankcase Cover	7203-0253-00B
5	2	3/4" Pipe Plug, Square Head	170-034001-237
6	1	Oil Level Dipstick	7203-0342-00A
7	1	O-Ring, Size #2-110	110-000110-201
8	5	1/4" Pipe Plug, Socket Head	170-014003-405
9	1	Breather, Crankcase, 3/4" NPTM	7602-3002-10A
10	3	1/2" Pipe Plug, Socket Head	170-012003-237

MA-75L, SC-115L			
Item	Quantity	Description	Part Number
11	5	Connecting Rod sub-assembly, which includes:	7203-0104-00D
12	1	Wrist Pin Bushing	7203-0115-01A
13	2	3/8" NC x 2-1/2" Long, Socket Head Cap Screw	100-038212-454
14	2	3/8" Reg. Spring Lockwasher	05454A007
15	5	Crankpin Bearing Pair	7203-0160-00K
16	5	Wrist Pin	7203-0116-00A
17	5	Crosshead	7203-0105-00C
18	5	Wiper Box	7203-0108-00C
19	10	1/2" x 1-1/2" Long, Hex Head Cap Screw	100-012112-273
20	5	Polypak Ring	145-114178-999
21	5	Oil Seal	145-114206-999
22	5	O-Ring	001500121

Power Frame Assembly; Connecting Rod, Crosshead & Wiper Box Assembly

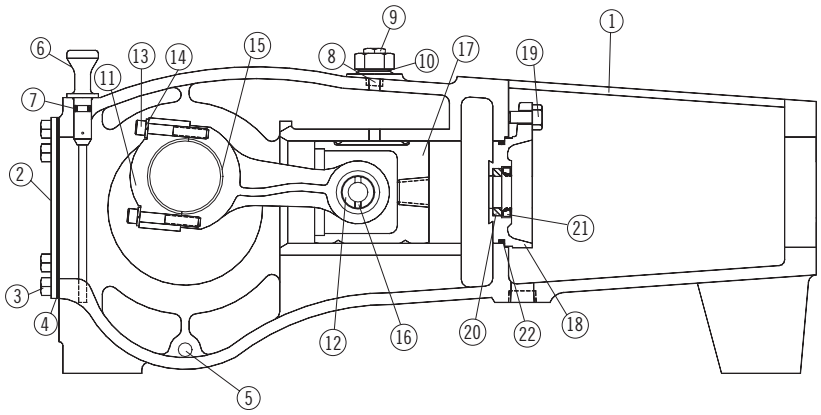

MA-75H, SC-115, SC-115H			
Item	Quantity	Description	Part Number
1	1	Power Frame	7203-0251-00K
2	1	Crankcase Cover	7203-0244-00B
3	12	3/8" NC Hex Head Cap Screw x 5/8" Long	100-038058-273
4	1	Gasket, Crankcase Cover	7203-0253-00B
5	2	Plug, 3/4" Pipe; Square Head Steel	170-034001-237
6	1	Oil Level Dipstick	7203-0342-00A
7	1	O-Ring, Size #2-203	110-000110-201
8	5	1/4" Pipe Plug, Socket Head	170-014003-405
9	1	Breather, Crankcase, 3/4" NPTM	7602-3002-10A
10	3	1/2" Pipe Plug, Socket Head	170-012003-237

MA-75H, SC-115, SC-115H			
Item	Quantity	Description	Part Number
11	10	Connecting Rod sub-assembly, which includes:	7203-0104-00D
12	1	Wrist Pin Bushing	7203-0115-01A
13	2	3/8" NC x 2-1/2" Long, Socket Head Cap Screw	100-038212-454
14	2	3/8" Reg. Spring Lockwasher	05454A007
15	5	Crankpin Bearing Pair	7203-0160-00K
16	5	Wrist Pin	7203-0116-00A
17	5	Crosshead	7203-0105-00C
18	5	Wiper Box	7203-0108-00C
19	10	1/2" x 1-1/2" Long, Hex Head Cap Screw	100-012112-273
20	5	Polypak Ring	145-114178-999
21	5	Oil Seal	145-114206-999
22	5	O-Ring	001500121

Crankshaft Assembly 2-1/4" Stroke; Right-Hand and Left-Hand Drive; Right-Hand Shown

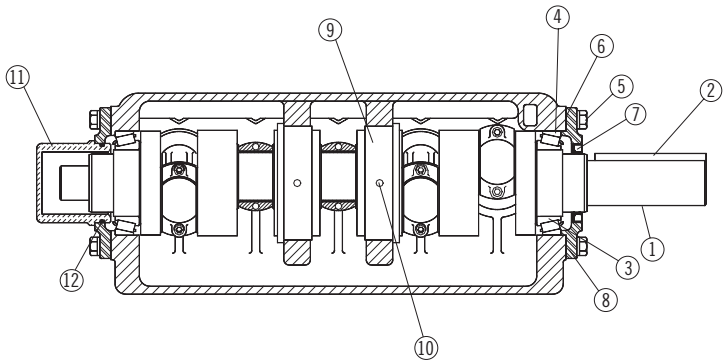

MA-45M			
Item	Quantity	Description	Part Number
1	1	Crankshaft	7206-0153-50D
2	1	Drive Key	146-012314-236
		Crankshaft Kit (includes items 1, 2, 3 & 4)	PE248KB
3	2	Bearing Cone, Tapered Roller	203-09624-999
4	2	Bearing Cup	202-02624-999
5	12	1/2" NC Hex Head Cap Screw 1-1/4" Long	100-012114-273
6	2	Shim Set	7509-0014-50A

MA-45M			
Item	Quantity	Description	Part Number
7	1	Oil Seal – *See Note Below	145-234334-999
8	2	Bearing Retainer	7206-0007-50B
9	2	Center Bearing	7206-0051-00B
10	2	3/8" NC Hex Socket Hd. Dog Point Set Screw x 1.25	119-038034-999
11	1	Extension Guard – *See Note Below	7203-0176-00A
12	1	O-Ring – *See Note Below	110-000238-200

* **NOTE** – If crankshaft accessory drive extension is to be utilized (for example: to drive a packing lubricator) then omit Item 11, Extension Guard, and also increase the quantity of Item 7, from one required to two. Omit Item 12, O-Ring.

Crankshaft Assembly 2-1/4" Stroke; Right-Hand and Left-Hand Drive; Right-Hand Shown

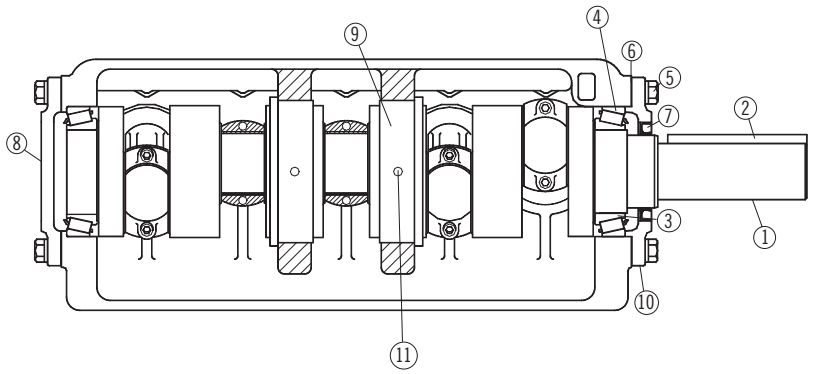

SC-80, SC-80H			
Item	Quantity	Description	Part Number
		Crankshaft Assembly (includes items 1 & 2)	PE250K
1	1	Crankshaft, 2-1/4" Stroke	7206-0074-50D
2	1	Drive Key	146-012314-236
		Crankshaft Kit (includes items 1, 2, 3 & 4)	PE250KB
3	2	Bearing Cone, Tapered Roller	203-09624-999
4	2	Bearing Cup	202-02624-999
5	12	1/2" NC Hex Head Cap Screw 1-1/4" Long	100-012114-273

SC-80, SC-80H			
Item	Quantity	Description	Part Number
6	2	Shim Set	7509-0014-50A
7	1	Oil Seal	145-234334-999
8	2	Bearing Cup Retainer	7206-0007-50B
9	2	Center Bearing	7206-0051-00B
10	2	3/8" NC Hex Socket Hd. Half Dog Point Set Screw	119-038034-999
11	1	Plug	7206-0064-00A

Crankshaft Assembly 2-3/4" Stroke; Right-Hand and Left-Hand Drive; Right-Hand Shown

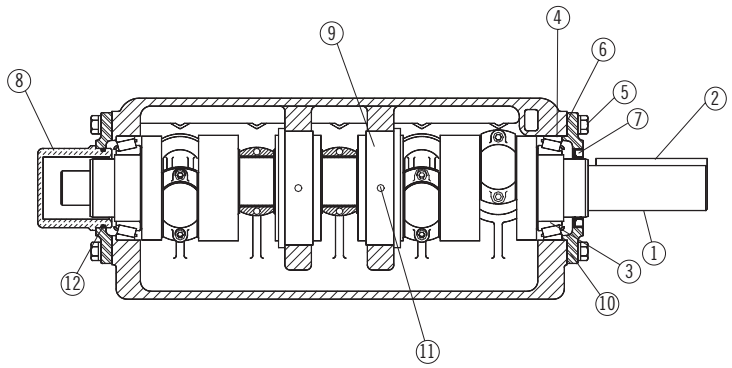

MA-75L, MA-75M, MA-75H			
Item	Quantity	Description	Part Number
		Crankshaft Assembly (includes items 1 & 2)	PE318K
1	1	Crankshaft, 2-3/4" Stroke	7203-0448-00D
2	1	Drive Key	146-058512-236
		Crankshaft Kit (includes items 1, 2, 3 & 4)	PE318KB
3	2	Bearing Cone, Tapered Roller	203-947000-999
4	2	Bearing Cup	202-247000-999
5	12	1/2" NC Hex Head Cap Screw 1-1/2" Long	100-012112-273

MA-75L, MA-75M, MA-75H			
Item	Quantity	Description	Part Number
6	2	Shim Set	7509-0013-00A
7	2	Oil Seal	145-278334-999
8	1	Cover, Crankshaft Extension	7206-0176-0007
9	2	Center Bearing	7203-0243-00B
10	2	Bearing Retainer	7203-0109-00B
11	2	3/8" NC Set Screw x 3/4" Long	119-038034-999
12	1	O-Ring	110-000238-200

Crankshaft Assembly 2-3/4" Stroke; Right-Hand and Left-Hand Drive; Right-Hand Shown

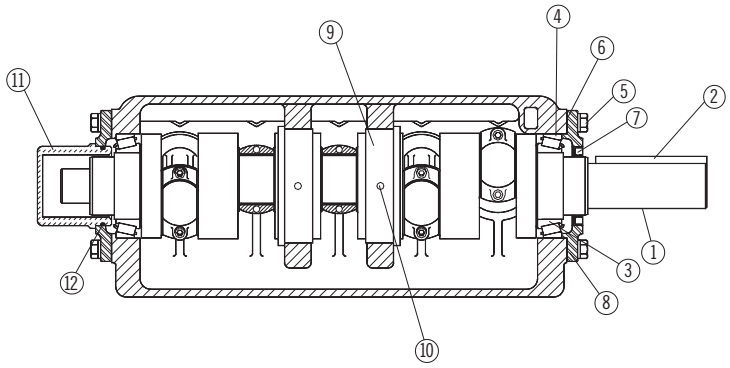

SC-115L, SC-115, SC-115H			
Item	Quantity	Description	Part Number
		Crankshaft Assembly (includes items 1 & 2)	PE155K
1	1	Crankshaft, 2-3/4" Stroke	7203-0250-00D
2	1	Drive Key	146-058512-236
		Crankshaft Kit (includes items 1, 2, 3 & 4)	PE155KB
3	2	Bearing Cone, Tapered Roller	203-947000-999
4	2	Bearing Cup	202-247000-999
5	12	1/2" NC Hex Head Cap Screw 1-1/2" Long	100-012112-273

SC-115L, SC-115, SC-115H			
Item	Quantity	Description	Part Number
6	2	Shim Set	7509-0013-00A
7	1	Oil Seal	145-278334-999
8	1	Bearing Retainer, Blind	7203-0155-01C
9	2	Center Bearing	7203-0243-00B
10	1	Bearing Retainer	7203-0109-00B
11	2	3/8" NC Hex Socket Hd. Half Dog Point Set Screw	119-038034-999
12	1	O-Ring	110-000238-200

Crankshaft Assembly 2-3/4" Stroke; Auburn Planetary #8

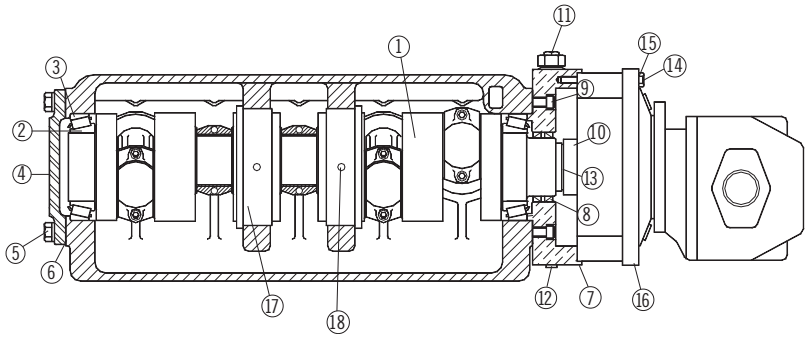

SC-115				
Item	Quantity	Description	L.H. Drive Part Numbers	R.H. Drive Part Numbers
		Crankshaft Assembly (includes items 1, 10 & 13)	PE262K	PE221K
1	1	Crankshaft	7203-0524-00A	7203-0468-00A
10	1	Planetary Output Shaft	7203-0525-00A	7203-0466-00A
13	1	Snap Ring	226-000237-999	226-000237-999
		Crankshaft Kit (includes items 1, 2, 3, 10 & 13)	PE262KB	PE221KB
2	2	Bearing Cone, Tapered Roller	203-947000-999	203-947000-999
3	2	Bearing Cup	202-247000-999	202-247000-999
4	1	Blind Bearing Retainer	7203-0155-01C	7203-0155-01C
5	6	1/2" NC Hex Head Cap Screws x 1-1/2" Long	100-012112-273	100-012112-273
6	1	Shim Set	7509-0013-00A	7509-0013-00A
7	1	Bearing Retainer	7203-0469-00B	7203-0469-00B
8	2	Oil Seal	145-278334-999	145-278334-999

SC-115				
Item	Quantity	Description	L.H. Drive Part Numbers	R.H. Drive Part Numbers
9	6	1/2" NC Socket Head Cap Screw x 1-3/4" Long	105-012134-273	105-012134-273
10	1	(listed above with crankshaft assembly)		
11	1	Breather Filter	7602-3002-10A	7602-3002-10A
12	2	1/4" NPT Pipe Plug	170-014002-405	170-014002-405
13	1	(listed above with crankshaft assembly)		
14	12	3/8" NC Hex Head Cap Screw x 3-1/4" Long	100-038312-454	100-038314-454
15	12	3/8" Washer "Stat-O-Seal"	156-038068-999	156-038068-999
16	1	Auburn Gear #8 Kit	RTF	RTF
17	2	Center Bearing	7203-0243-00B	7203-0243-00B
18	2	3/8" NC Hex Socket Hd. Set Screw x 1-1/2"	119-038034-999	119-038034-999

Crankshaft Assembly 2-3/4" Stroke; Auburn Planetary Gear #6

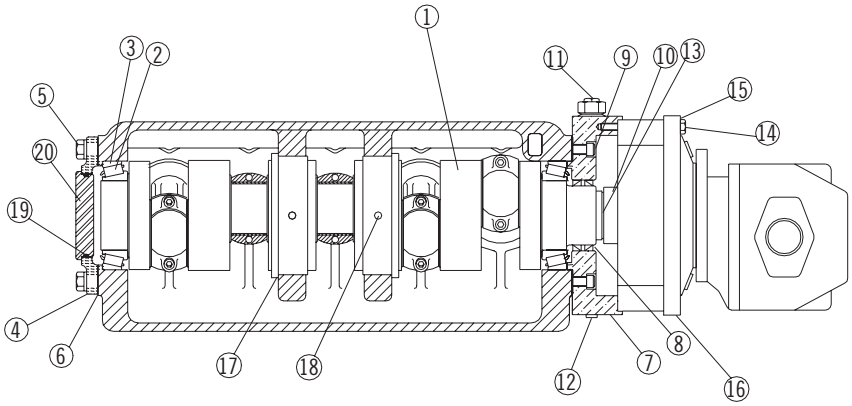

SC-115L, SC-115			
Item	Quantity	Description	L.H. Drive Part Numbers
		Crankshaft Assembly (includes items 1, 10 & 13)	PE266K
1	1	Crankshaft	7203-0540-00A
10	1	Planetary Output Shaft	7203-0504-00A
13	1	Snap Ring	226-000225-999
		Crankshaft Kit (includes items 1, 2, 3, 10 & 13)	PE266KB
2	2	Bearing Cone, Tapered Roller	203-947000-999
3	2	Bearing Cup	202-247000-999
4	1	Bearing Retainer	7203-0155-01C
5	6	1/2" NC Hex Head Cap Screws x 1-1/2" Long	100-012112-273
6	1	Shim Set	7509-0013-00A
7	1	Bearing Retainer	7203-0454-00B
8	2	Oil Seal	145-234334-999

SC-115L, SC-115			
Item	Quantity	Description	L.H. Drive Part Numbers
9	6	1/2" NC Socket Head Cap Screw x 2" Long	105-012200-273
10	1	(listed above with the crankshaft assembly)	
11	1	Breather Filter	7602-3002-10A
12	2	1/4" NPT Pipe Plug	170-014002-405
13	1	(listed above with the crankshaft assembly)	
14	12	5/16" NC Hex Head Cap Screw x 3-1/4" Long	100-516314-454
15	12	5/16" Washer "Stat-O-Seal"	156-516062-999
16	1	Auburn Gear #6 Kit 3.75:1	7203-0505-00A
17	2	Center Bearing	7203-0243-00B
18	2	3/8" NC Hex Socket Hd. Set Screw x 1-1/2"	119-038034-999
19	1	Frame Plug	7206-0064-00A
20	1	O-Ring	110-000238-201

Fluid End Assembly

MA-45M, SC-80			
Item	Quantity	Description	Part Number
1	1	Fluid End, Nickel Aluminum Bronze	7206-0058-00E
2	2	3/4" NC Socket Head Cap Screw x 2" Long	271-034200-271
3	10	Valve Cover & Cyl. Head Plug	7206-0018-10A
4	10	3/8" NC Hex Head Cap Screw x 1-1/4" Long	100-038114-273
5	2	Retainer Plate, Valve Cover & Cylinder Head	7206-0056-00C
6	10	Fluid Seal, Nitrile Rubber	7206-0016-00A
7	12	5/8" NC Hex Head Cap Screw x 2-3/4" Long	100-058234-273
8	10	5/8" NC Hex Head Cap Screw x 7-1/2" Long	100-058712-273
9	1	Retainer Plate, Stuffing Box	7206-0055-00C
10	2	Screw, Cap; Hex Head, 3/8" NC x 1-3/4" Long	100-038134-273
11	2	Stud, Powerframe to Liquid End	7206-0052-00B
12	4	5/8" NC Heavy Hex Nut	127-058011-243

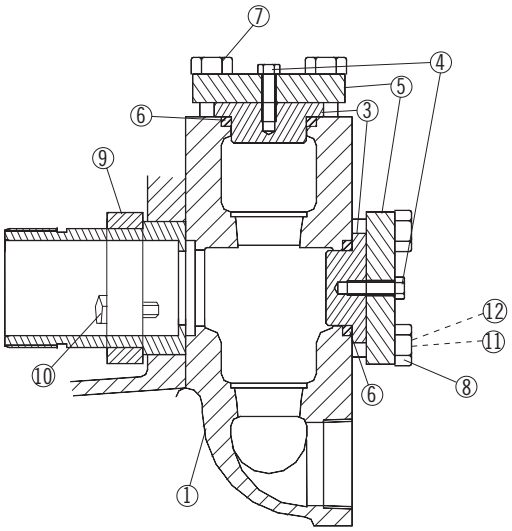

Fluid End Assembly

MA-75L			
Item	Quantity	Description	Part Number
1	1	Fluid End, Ductile Iron	7203-0533-00D
2	2	7/8" NC Socket Head Cap Screw x 2-3/4" Long	271-078234-271
3	10	Valve Cover & Cyl. Head Plug	7203-0565-00B
4	8	1/2" NC Hex Head Cap Screw x 1-1/4" Long	100-012114-273
5	2	Retainer Plate, Valve Cover & Cylinder Head	7203-0242-00B
6	10	Fluid Seal, Nitrile Rubber	7202-0041-00A
7	12	3/4" NC Hex Head Cap Screw x 2" Long	100-034200-273
8	10	3/4" NC Hex Head Cap Screw x 9-1/2" Long	100-034912-273
9	1	Retainer Plate, Stuffing Box	7203-0323-00B
10	2	1/2" NC Hex Head Cap Screw x 1-1/2" Long	100-012112-273
11	2	Stud, Powerframe to Liquid End	7203-0566-00B
12	4	3/4" NC Heavy Hex Nut	127-034010-243

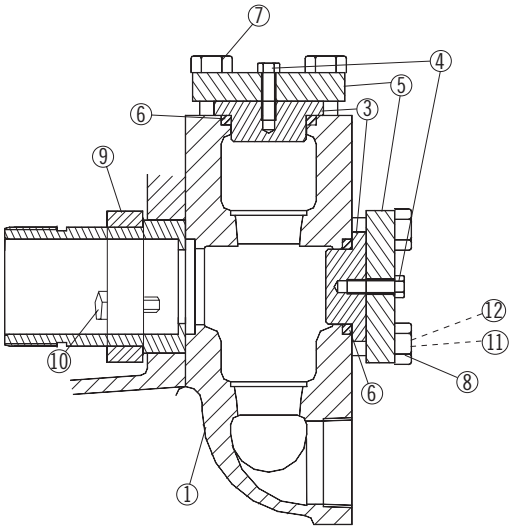

Fluid End Assembly

MA-75M, SC-115			
Item	Quantity	Description	Part Number
1	1	Fluid End, Nickel Aluminum Bronze	7203-0249-00E
2	2	7/8" NC Socket Head Cap Screw x 2-3/4" Long	271-078234-271
3	10	Valve Cover & Cyl. Head Plug	7203-0119-20A
4	10	1/2" NC Hex Head Cap Screw x 1-1/4" Long	100-012114-273
5	2	Retainer Plate, Valve Cover & Cylinder Head	7203-0242-00B
6	10	Fluid Seal, Nitrile Rubber	7203-0118-00A
7	4	3/4" NC Hex Head Cap Screw x 3" Long	100-034300-273
8	10	3/4" NC Hex Head Cap Screw x 9" Long	100-034900-273
9	1	Retainer Plate, Stuffing Box	7203-0245-00B
10	2	5/8" NC Hex Head Cap Screw x 2" Long	100-058200-273
11	2	Stud, Powerframe to Liquid End	7203-0246-00B
12	4	3/4" NC Heavy Hex Nut	127-034010-243
13	8	3/4" NC Hex Head Cap Screw x 3-1/2" Long	100-034312-273

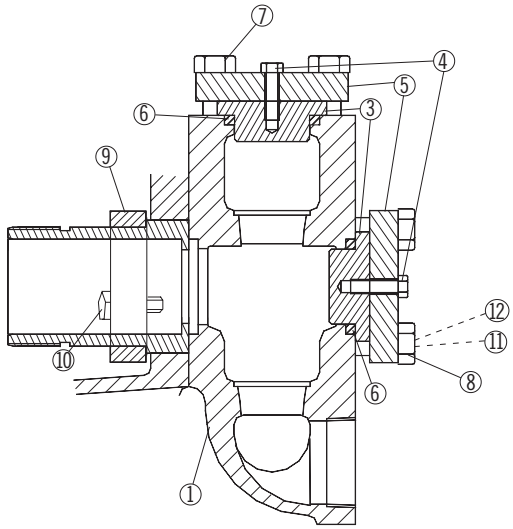

Side Suction Fluid End Assembly

SC-115L			
Item	Quantity	Description	Part Number
1	1	Fluid End, Ductile Iron	7203-0533-00D
2	2	7/8" NC Socket Head Cap Screw x 2-3/4" Long	271-078234-271
3	10	Valve Cover & Cyl. Head Plug	7203-0565-00B
4	10	1/2" NC Hex Head Cap Screw x 1-1/4" Long	100-012114-273
5	2	Retainer Plate, Valve Cover & Cylinder Head	7203-0242-00B
6	10	Fluid Seal, O-Ring	7202-0041-00A
7	4	3/4" NC Hex Head Cap Screw x 2-1/2" Long	100-034200-273
8	10	3/4" NC Hex Head Cap Screw x 9-1/2" Long	100-034912-273
9	1	Retainer Plate, Stuffing Box	7203-0323-00B
10	2	5/8" NC Hex Head Cap Screw x 2-1/4" Long	100-058214-273
11	2	Stud, Power Frame to Fluid End (not shown)	7203-0246-00B
12	4	3/4" Heavy Hex Nut (not shown)	127-034010-243
13	8	3/4" NC Hex Hd. Cap Screw x 4" Long (not shown)	100-034400-273

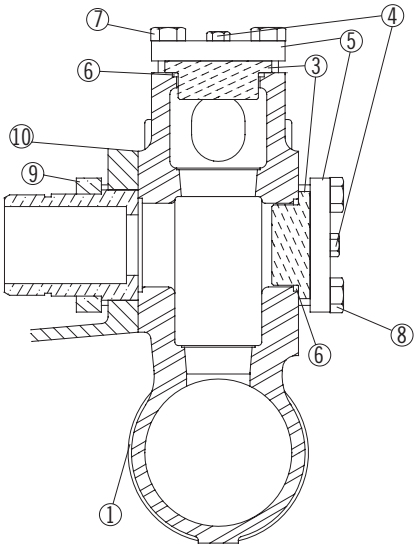

Fluid End Assembly

MA-45			
Item	Quantity	Description	Part Number
1	1	Fluid End	Consult Factory
2	2	3/4" NC Socket Head Cap Screw x 5-1/2" long	271-034512-271
3	10	Valve Cover & Cyl. Head Plug	7206-0018-10A
4	10	3/8" NC Hex Head Cap Screw x 1-1/4" long	100-038114-273
5	2	Retainer Plate, Valve Cover & Cylinder Head	7206-0056-00C
6	10	Fluid Seal, Nitrile Rubber	7206-0016-00A
7	12	5/8" NC Hex Head Cap Screw x 2" long	100-058200-273
8	10	5/8" NC Hex Head Cap Screw x 8-1/2" long	100-058812-273
9	1	Retainer Plate, Stuffing Box	7206-0055-00C
10	2	3/8" NC Hex Head Cap Screw x 1-1/2" long	100-038112-273
11	2	Stud, Powerframe to Liquid End	7206-0230-00B
12	4	5/8" NC Heavy Hex Nut	133-012013-243

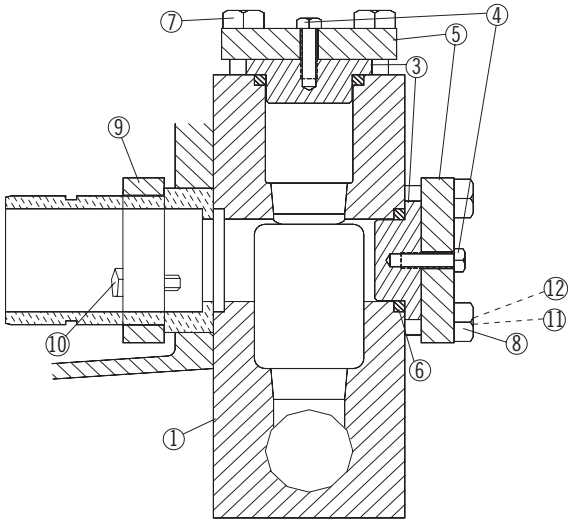

Fluid End Assembly

MA-75L			
Item	Quantity	Description	Part Number
1	1	Fluid End	Consult Factory
2	2	7/8" NC Socket Head Cap Screw x 5-3/4" long	271-078534-271
3	5	Cyl. Head Plug, Stainless Steel	7203-0565-00A
4	5	Valve Cover Plug, Stainless Steel	7203-0565-00A
5	2	Retainer Plate, Cylinder and Valve Cover	7203-0242-00B
6	10	1/2" NC Hex Head Cap Screw x 1-1/4"	100-012114-273
7	5	Seal, Fluid; Nitrile	7202-0041-00A
8	5	Seal, Fluid; Nitrile	7202-0041-00A
9	12	3/4" NC Hex Head Cap Screw x 2" long	100-034200-273
10	10	3/4" NC Hex Head Cap Screw x 9"	100-034900-273
11	4	3/4" NC Hex Nut	127-034010-243
12	2	Stud, Powerframe to Liquid End	7203-0246-00B
13	1	Plate, Stuffing Box Retainer	7203-0245-00B
14	2	5/8" NC Hex Head Cap Screw x 2"	310-058200-454

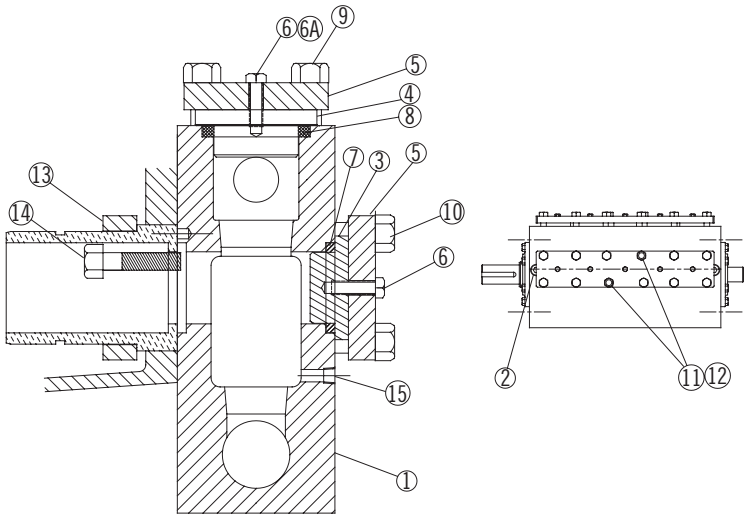

Fluid End Assembly

MA-75M			
Item	Quantity	Description	Part Number
1	1	Fluid End	Consult Factory
2	2	7/8" NC Socket Head Cap Screw x 5-3/4" Long	271-078534-271
3	5	Cyl. Head Plug	7203-0119-00A
4	5	Valve Cover Plug	7203-0636-00A
5	2	Retainer Plate, Cylinder and Valve Cover	7203-0242-00B
6	8	1/2" NC Hex Head Cap Screw x 1-1/4"	100-012114-273
6A	2	1/2" NC Hex Head Cap Screw x 1-1/2"	100-012112-273
7	5	Seal, Fluid; Nitrile	7203-0118-00A
8	5	Seal, Fluid; Nitrile	7202-0012-00A
9	12	3/4" NC Hex Head Cap Screw x 2" Long	100-034200-273
10	10	3/4" NC Hex Head Cap Screw x 9"	100-034900-273
11	4	3/4" NC Hex Nut	127-034010-243
12	2	Stud, Power Frame to Liquid End	7203-0246-00B
13	1	Plate, Stuffing Box Retainer	7203-0245-00B
14	2	5/8" NC Hex Head Cap Screw x 2"	100-058200-273

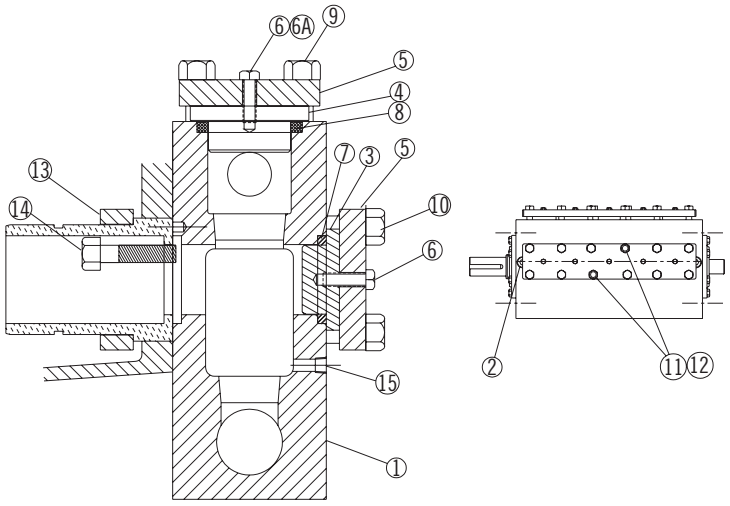

Fluid End Assembly

MA-75H			
Item	Quantity	Description	Part Number
1	1	Fluid End	Consult Factory
2	2	7/8" NC Socket Head Cap Screw x 5-3/4" Long	271-078534-271
3	5	Cyl. Head Plug	7203-0119-20A
4	5	Valve Cover Plug	7203-0709-20A
5	1	Retainer Plate, Valve Cover	7203-0654-00B
5A	1	Retainer Plate, Cylinder Head	7203-0242-00B
6	8	1/2" NC Hex Head Cap Screw x 1-1/2"	100-012112-273
6A	2	1/2" NC Hex Head Cap Screw x 1-3/4"	100-012134-273
7	5	Seal, Fluid; Nitrile	7207-0022-00A
8	5	Seal, Fluid; Nitrile	7203-0118-00A
9	12	1" NC Hex Head Cap Screw x 3" Long	100-100300-273
10	10	3/4" NC Hex Head Cap Screw x 9"	100-034900-273
11	4	3/4" NC Hex Nut	127-034010-243
12	2	Stud, Power Frame to Liquid End	7203-0566-00B
13	1	Plate, Stuffing Box Retainer	7203-0245-00B
14	2	5/8" NC Hex Head Cap Screw x 2"	100-058200-273
15	5	3/4" Pipe Plug	170-034002-405

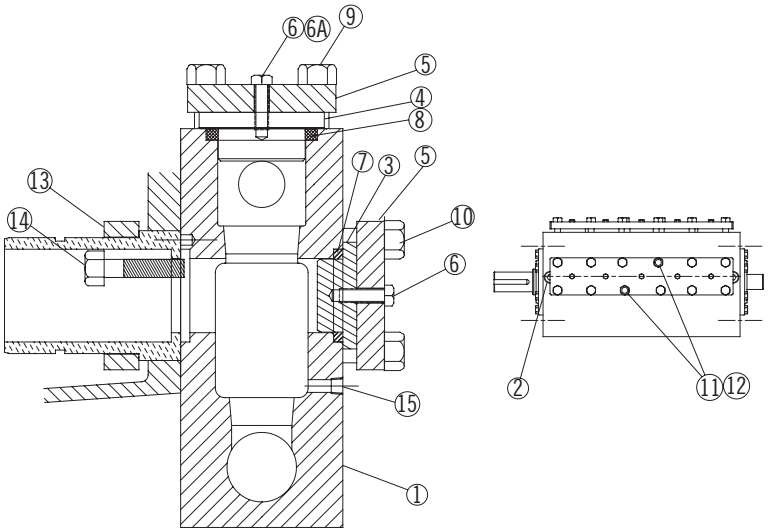

Fluid End Assembly

SC-80H			
Item	Quantity	Description	Part Number
1	1	Fluid End	Consult Factory
2	2	3/4" NC Hex Head Cap Screw x 5-1/2" Long	100-034512-273
3	5	Valve Cover Plug	7206-0018-10A
4	5	3/8" NC Hex Head Cap Screw x 1-1/4" Long	100-038114-273
5	1	Retainer Plate, Valve Cover	7206-0266-00B
6	5	Fluid Seal, Nitrile Rubber	7206-0016-00A
7	12	7/8" NC Hex Head Cap Screw x 2-1/2" Long	100-078212-273
8	10	5/8" NC Hex Head Cap Screw x 7-1/2" Long	100-058712-273
9	1	Retainer Plate, Stuffing Boxes	7206-0055-00C
10	2	3/8" NC Hex Head Cap Screw x 1-1/2" Long	100-038112-273
11	2	Stud, Fluid End to Power End	7206-0428-00B
12	2	Nut, Heavy Hex, 1/2" NC	133-012013-243

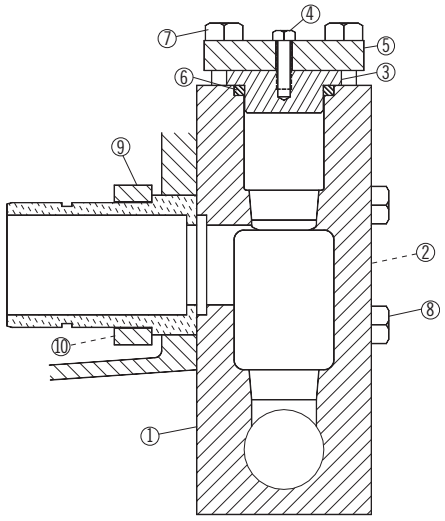

Fluid End Assembly

SC-115H			
Item	Quantity	Description	Part Number
1	1	Fluid End	Consult Factory
2	2	7/8" NC Socket Head Cap Screw x 7" Long	100-078700-273
3	5	Valve Cover & Cyl. Head Plug	7203-0119-00A
4	5	1/2" NC Hex Head Cap Screw x 1-1/2" Long	100-012112-273
5	1	Retainer Plate, Valve Cover & Cylinder Head	7203-0654-00B
6	5	Fluid Seal, Nitrile Rubber	7203-0118-00A
7	12	1" NC Hex Head Cap Screw x 3" Long	100-100300-273
8	10	3/4" NC Hex Head Cap Screw x 8" Long	100-034800-00
9	1	Retainer Plate, Stuffing Box	7203-0245-00B
10	2	5/8" NC Hex Head Cap Screw x 2-1/4" Long	100-058114-273
11	1	1/4" Hex Head Pipe Plug	170-014002-237
12	4	Nut, 3/4" NC	127-034010-243
13	2	Stud, Fluid End to Power End	7203-0246-00B

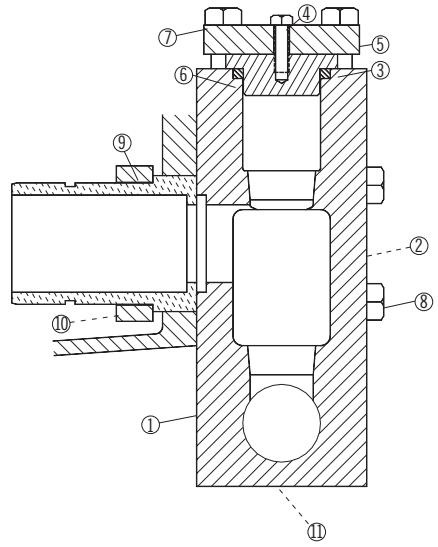

Stuffing Box Assembly

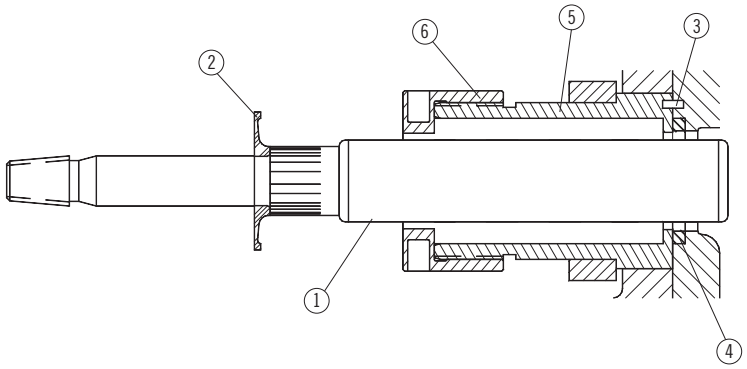

Qty. 5 per pump ea.

MA-45M, SC-80, SC-80H						
Plunger Diameter	Plunger, Chrome-Oxide (#1)	Baffle (#2)	Roll Pin (#3)	Stuffing Box Seal, Nitrile Rubber (#4)	Stuffing Box **Steel (#5)	Gland **Steel (#6)
1-7/8"	7206-0023-15B	7206-0015-00A	149-014058-999	7206-0016-00A	7206-0025-00A	7206-0012-00A
1-3/4"	7206-0023-14B	7206-0015-00A	149-014058-999	7206-0016-00A	7206-0025-00A	7206-0012-00A
1-5/8"	7206-0023-13B	7206-0015-00A	149-014058-999	7206-0016-00A	7206-0025-00A	7206-0012-00A
1-1/2"	7206-0023-12B	7206-0015-00A	149-014058-999	7206-0016-00A	7206-0025-00A	7206-0012-00A
1-3/8"	7206-0023-11B	7206-0015-00A	149-014058-999	7206-0016-00A	7206-0026-02A	7206-0013-00A
1-1/4"	7206-0023-10B	7206-0015-00A	149-014058-999	7206-0016-00A	7206-0026-02A	7206-0013-00A
1-1/8"	7206-0023-09B	7206-0015-00A	149-014058-999	7206-0016-00A	7206-0027-00A	7206-0011-00B
1"*	7206-0023-08B	7206-0015-00A	149-014058-999	7206-0016-00A	7206-0027-00A	7206-0011-00B
7/8"*	7206-0023-07B	7206-0015-00A	149-014058-999	110-000320-201	7206-0028-00A	7206-0014-00B

* **NOTE:** 1" and 7/8" pumps have a separate Extension Rod (#7206-0024-00A).

** For both Stuffing Box and Gland use the following: Nickel Aluminum Bronze: xxxx-xxxx-01A; 316 Stainless Steel: xxxx-xxxx-03A; 2205 Duplex Stainless Steel: xxxx-xxxx-04A. GLAND NUT WRENCH 7206-0086-00B

Stuffing Box Assembly

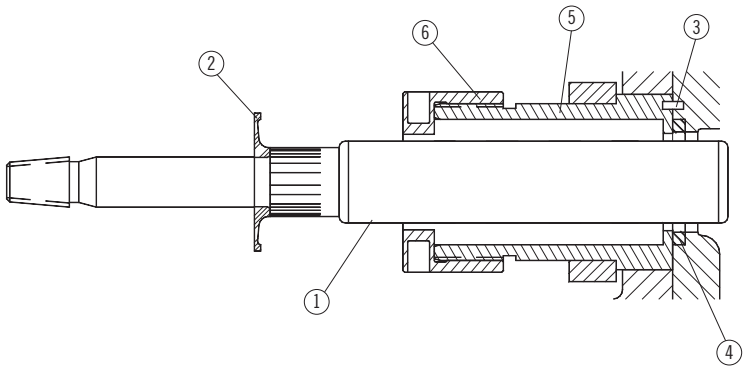

Qty. 5 per pump ea.

MA-75L, SC-115L						
Plunger Diameter	Plunger, Chrome-Oxide (#1)*	Baffle (#2)	Roll Pin (#3)	Stuffing Box Seal, Nitrile Rubber (#4)	Stuffing Box **Steel (#5)	Gland **Steel (#6)
2-3/4"	7203-0113-22B	7203-0117-00A	149-014058-999	7202-0041-00A	7203-0289-02B	7203-0290-02B
2-5/8"	7203-0113-21B	7203-0117-00A	149-014058-999	7202-0041-00A	7203-0289-02B	7203-0290-02B
2-1/2"	7203-0113-20B	7203-0117-00A	149-014058-999	7202-0041-00A	7203-0552-02B	7203-0534-02B
2-3/8"	7203-0113-19B	7203-0117-00A	149-014058-999	7202-0041-00A	7203-0552-02B	7203-0534-02B
2-1/4"	7203-0113-18B	7203-0117-00A	149-014058-999	7202-0041-00A	7203-0755-02B	7202-0180-02B

* **NOTE:** For TX plunger use 7203-0530-xxB (for abrasive service).

** For both Stuffing Box and Gland use the following: Nickel Aluminum Bronze: xxxx-xxxx-01; 316 Stainless Steel: xxxx-xxxx-03; 2205 Duplex Stainless Steel: xxxx-xxxx-04. GLAND NUT WRENCH 7202-0399-00B

Stuffing Box Assembly

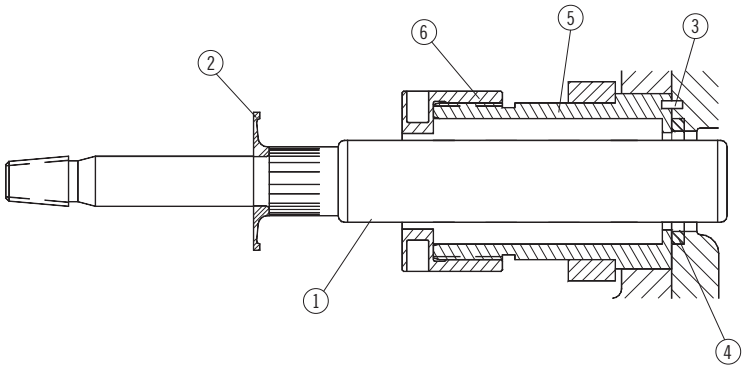

Qty. 5 per pump ea.

MA-75M, SC-115						
Plunger Diameter	Plunger, Chrome-Oxide (#1)*	Baffle (#2)	Roll Pin (#3)	Stuffing Box Seal, Nitrile Rubber (#4)	Stuffing Box **Ductile (#5)	Gland Nut **Ductile (#6)
2-1/4"	7203-0113-18B	7203-0117-00A	149-014058-999	7203-0118-00A	7203-0111-00A	7202-0180-00B
2-1/8"	7203-0113-17B	7203-0117-00A	149-014058-999	7203-0118-00A	7203-0111-00A	7202-0180-00B
2"	7203-0113-16B	7203-0117-00A	149-014058-999	7203-0118-00A	7203-0111-00A	7202-0180-00B
1-7/8"	7203-0113-15B	7203-0117-00A	149-014058-999	7203-0118-00A	7203-0111-00A	7202-0180-00B
1-3/4"	7203-0113-14B	7203-0117-00A	149-014058-999	7203-0118-00A	7203-0111-00A	7202-0180-00B
1-5/8"	7203-0113-13B	7203-0117-00A	149-014058-999	7203-0118-00A	7203-0133-00A	7202-0179-00B
1-1/2"	7203-0113-12B	7203-0117-00A	149-014058-999	7203-0118-00A	7203-0133-00A	7202-0179-00B
1-3/8"	7203-0113-11B	7203-0117-00A	149-014058-999	7203-0118-00A	7203-0134-00A	7202-0178-00B

* **NOTE:** For TX plunger use 7203-0530-xxB (for abrasive service).

** For both Stuffing Box and Gland use the following: Nickel Aluminum Bronze: xxxx-xxxx-01X; 316 Stainless Steel: xxxx-xxxx-03X; 2205 Duplex Stainless Steel: xxxx-xxxx-04X. GLAND NUT WRENCH 7202-0399-00B.

Stuffing Box Assembly

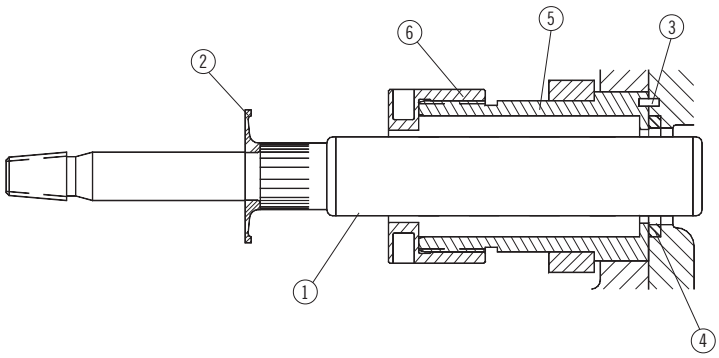

Qty. 5 per pump ea.

MA-75H, SC-115H						
Plunger Diameter	Plunger, Chrome-Oxide (#1)	Baffle (#2)	Roll Pin (#3)	Stuffing Box Seal, Nitrile Rubber (#4)	Stuffing Box **Ductile (#5)	Gland **Steel (#6)
1-5/8"	7203-0113-13A	7203-0117-00A	149-014058-999	7203-0118-00A	7203-0133-00A	7202-0179-00B
1-1/2"	7203-0113-12B	7203-0117-00A	149-014058-999	7203-0118-00A	7203-0133-00B	7202-0179-00B
1-3/8"	7203-0113-11B	7203-0117-00A	149-014058-999	7203-0118-00A	7203-0134-03A	7202-0178-00B
1-1/4"	7203-0113-10B	7203-0117-00A	149-014058-999	7203-0118-00A	7203-0134-03A	7202-0178-00B
1-1/8"	7203-0112-09A	7203-0117-00A	149-014058-999	7207-0022-00A	7203-0136-02A	7203-0149-00B
1"	7203-0112-08B	7203-0117-00A	149-014058-999	7207-0022-00A	7203-0136-02A	7203-0149-00B
7/8"	7203-0112-07B	7203-0117-00A	149-014058-999	7207-0022-00A	7203-0443-02A	7203-0149-00B

NOTE: Plungers with a 1-1/4" diameter and under need a separate extension rod (7203-0114-00A).

* Various materials available – contact factory. **GLAND NUT WRENCH 7202-0399-00B.

THIS PAGE INTENTIONALLY LEFT BLANK

STANDARD LIMITED WARRANTY
CENTRIFUGAL & RECIPROCATING PUMPS

Pentair Myers® warrants its products against defects in material and workmanship for a period of 12 months from the date of shipment from Pentair Myers or 18 months from the manufacturing date, whichever occurs first – provided that such products are used in compliance with the requirements of the Pentair Myers catalog and technical manuals.

During the warranty period and subject to the conditions set forth, Pentair Myers, at its discretion, will repair or replace to the original user, the parts that prove defective in materials and workmanship. Pentair Myers reserves the right to change or improve its products or any portions thereof without being obligated to provide such a change or improvement for prior sold and/or shipped units.

Seals, piston cups, packing, plungers, liners and valves used for handling clear, fresh, nonaerated water at a temperature not exceeding 120ºF are warranted for ninety days from date of shipment. All other applications are subject to a thirty day warranty. Accessories such as motors, engines and auxiliary equipment are warranted by the respective manufacturer and are excluded in this standard warranty. Under no circumstance will Pentair Myers be responsible for the cost of field labor, travel expenses, rented equipment, removal/reinstallation costs or freight expenses to and from the factory or an authorized Pentair Myers service facility.

This limited warranty will not apply: (a) to defects or malfunctions resulting from failure to properly install, operate or maintain the unit in accordance with the printed instructions provided; (b) to failures resulting from abuse, accident or negligence; (c) to normal maintenance services and parts used in connection with such service; (d) to units that are not installed in accordance with applicable local codes, ordinances and good trade practices; (e) if the unit is moved from its original installation location; (f) if unit is used for purposes other than for what it is designed and manufactured; (g) to any unit that has been repaired or altered by anyone other than Pentair Myers or an authorized Pentair Myers service provider; (h) to any unit that has been repaired using non factory specified/OEM parts.

Warranty Exclusions: PENTAIR MYERS MAKES NO EXPRESS OR IMPLIED WARRANTIES THAT EXTEND BEYOND THE DESCRIPTION ON THE FACE HEREOF. PENTAIR MYERS SPECIFICALLY DISCLAIMS THE IMPLIED WARRANTIES OF MERCHANTABILITY AND FITNESS FOR ANY PARTICULAR PURPOSE.

Liability Limitation: IN NO EVENT SHALL PENTAIR MYERS BE LIABLE OR RESPONSIBLE FOR CONSEQUENTIAL, INCIDENTAL OR SPECIAL DAMAGES RESULTING FROM OR RELATED IN ANY MANNER TO ANY PENTAIR MYERS PRODUCT OR PARTS THEREOF. PERSONAL INJURY AND/OR PROPERTY DAMAGE MAY RESULT FROM IMPROPER INSTALLATION. PENTAIR MYERS DISCLAIMS ALL LIABILITY, INCLUDING LIABILITY UNDER THIS WARRANTY, FOR IMPROPER INSTALLATION. PENTAIR MYERS RECOMMENDS INSTALLATION BY PROFESSIONALS.

Some states do not permit some or all of the above warranty limitations or the exclusion or limitation of incidental or consequential damages and therefore such limitations may not apply to you. No warranties or representations at any time made by any representatives of Pentair Myers shall vary or expand the provision hereof.

PENTAIR

MYERS® APLEX SERIES

1101 MYERS PARKWAY
ASHLAND, OHIO, USA 44805
855-274-8948

WWW.FEMYERS.COM

Warranty Rev. 12/13