PENTAIR

MYERS®

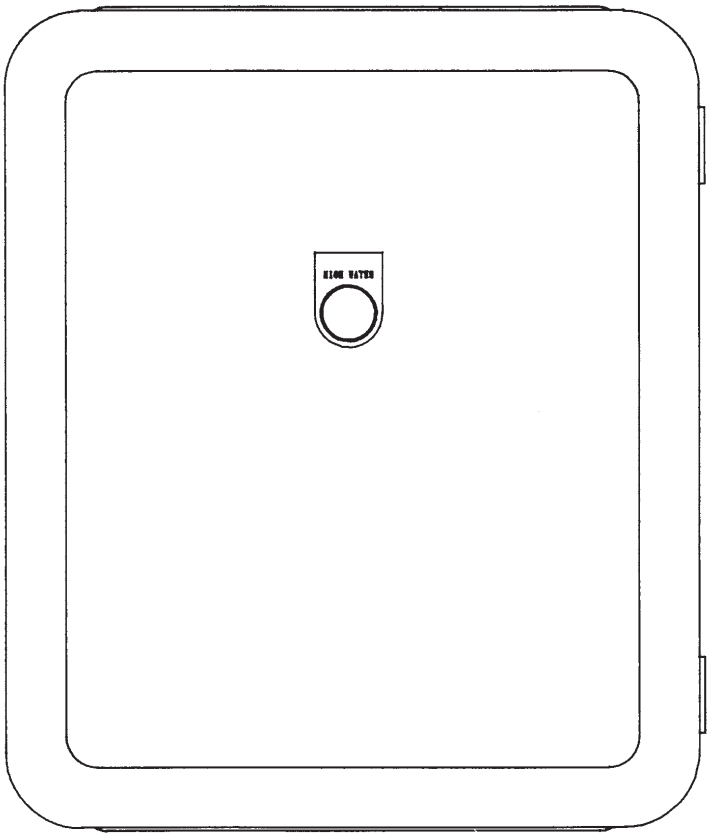

MODELS CE-11D, CE-11DW (¼-½ HP, 115V, 1PH)
CE(DS)-11D, CE(DS)-11DW (½ HP, 115V, 1PH)
CE-21D, CE-21DW (½-2 HP, 230V, 1PH)
CE(DS)-21D, CE(DS)-21DW (½-2 HP, 230V, 1PH)
CE-23D, CE-23DW (½-2 HP, 208-230V, 3PH)
CE-43D, CE-43DW (½-2 HP, 460V, 3PH)

CE CONTROL PANELS

INSTALLATION AND SERVICE INSTRUCTIONS FOR 1Ø AND 3Ø DUPLEX

NOTE! To the installer: Please make sure you provide this manual to the owner of the equipment or to the responsible party who maintains the system.

Part # 23833A149 | © 2012 Pentair Ltd. | 11/27/12

LOCATION AND MOUNTING

NEMA 1 ENCLOSURES: (INDOOR USE)

Locate the control box in a convenient location, preferably close to the pump installation. The box may be secured to a wall or other stable vertical support by use of the four mounting holes located on the back side of the control panel.

The box should be mounted approximately 5 feet from the floor to the circuit breaker handle. Care should be taken to avoid mounting the control box under sweating pipes, faucets or other damp locations.

NEMA 4X ENCLOSURES: (OUTDOOR USE)

The control box may be mounted at the location of the pump and basin or may be mounted in a remote location. The box should be secured to a stable vertical support which in turn should be secured to a concrete basin or footer. The box could also be mounted to the side of the house or other stationary support if available within a reasonable distance. When selecting a location, you should consider the visibility of the alarm light.

The box may be secured by the use of four mounting holes located in the mounting feet on the top and bottom of the box. The box should be mounted approximately 5 feet from the ground to the circuit breaker handle.

POWER SUPPLY

WARNING:
Do not attempt to wire this control box unless you have a good working knowledge of electricity and are familiar with state and local codes. If you are in doubt about anything, contact an electrician.

The power supply for the control box will vary depending upon which particular model you have purchased. **Do not** attempt to operate this unit on any other voltage or power distribution other than what it was originally designed. **Failure to comply with this will result in the immediate cancellation of all warranties and claims.**

It is advisable to put the pump on its own circuit using a circuit breaker adequately sized to protect the pump. Check state and local codes for the correct wire size and circuit protection to use. The wire should be sized large enough to handle the full load current of both pumps you are operating, and any voltage drop that might occur due to long service runs.

CALIFORNIA PROPOSITION 65 WARNING:

⚠WARNING This product and related accessories contain chemicals known to the State of California to cause cancer, birth defects or other reproductive harm.

Run power supply lines to the control box and secure (knockouts are not supplied in this box). Select a convenient location on the bottom for NEMA 4X enclosures, or on the top, sides or bottom for NEMA 1 enclosures, to enter the box with the power supply. Cut a hole with a chassis punch, caution should be taken not to get metal or fiberglass chips in the components while cutting hole. After the hole is cut, any metal or fiberglass particles **must** be removed from box. Failure to do so may result in premature component failure.

Connect incoming power to the circuit breaker top lugs and all necessary ground wires to the ground lug at the bottom of the box. The ground lug should be fastened to a good driven earth ground by one of the methods described in the National Electric Code.

CONNECTING PUMPS AND FLOATS TO CONTROL BOX

PUMP CORDS:
Run the wires from both pumps to the bottom of the control box by means of one of the methods described in your pump or basin installation instructions. A hole must be cut into the control box (use the same procedure as that described for incoming power supply lines).

Connect black wires to terminals marked M1, M2 and M3 (for 3 phase applications), or connect the black and white wire to terminals marked M1 and M2 (for 1 phase applications). Fasten green wire to ground lug.

Some WHRE & WHRH pumps may have an additional red or orange wire in the pump cord. This is for the seal leak probe and it should be connected to the terminal strip in the control box. See wiring diagram for the proper terminal connections.

NOTE: On 3 phase installations check for proper pump rotation. See the "ROTATION OF 3 PHASE PUMPS" section in this manual.

FLOAT CORDS:
See basin instructions for the proper depth at which to set the floats. Strip the float cord wires ⅜", twist strands together, and connect black and white wires to terminal strip in the control box. See wiring diagram for proper terminal connections.

OPERATING PUMPS

1. Make sure that all wires are inside the control box and not in a position to be pinched or shorted when the door is closed.
2. Turn on power to the control box.
3. Turn hand-off-auto switches to the "HAND" position. The pumps should start and the pump run lights should come on.
4. The alarm should activate when the alarm test switch is used.
5. To put into service, put the hand-off-auto switches in the "AUTO" position. See basin instructions.
6. If unit does not operate as described, see troubleshooting chart.

NOTE: Addition of electrical components and circuitry to this unit is expressly forbidden unless written factory authorization is obtained. Failure to do so will result in warranty cancellation.

ROTATION OF THREE PHASE PUMPS

IMPORTANT:
Rotation of three phase pumps must be established by one of the two methods described below.

CAUTION:
Keep hands and feet clear of impeller when checking rotation. Be sure to disconnect power to the control box while handling pumps. Make sure pump is wired and readied for rotation test before the control box is energized.

1. Before positioning pump in basin, run wires to control box. Lay the pump unit on its side and secure so that the starting torque of the motor will not cause the pump to roll. Energize the pump by turning the circuit breaker on and the hand-off-auto to "HAND". The rotation should be counterclockwise as observed facing the bottom of the pump.

   If you do not get the proper rotation, disconnect the power to the control box and change the position of any two of the black motor leads in the terminal blocks.
2. Install the pump in the basin and run in some water so the pump can operate. Energize the pump by turning the circuit breaker on and the hand-off-auto switch to "HAND". Let the pump pull the water down in the basin, and when the water reaches the bottom of the pump the rotation of the water can be observed. The water should rotate in a clockwise direction if the pump rotation is correct.

   If you do not get the proper rotation, disconnect the power to the control box and change the position of any two of the black motor leads in the terminal blocks.

CHECKING PUMP CURRENT DRAW

1 PHASE PUMPS:

1. Use a amprobe to check the amperage of either the black or white wire going to the pump.
2. Turn the hand-off-auto switch to the "HAND" position and compare the amperage reading to the values shown on the chart. (See page 7).
3. If you get a reading of 0, make sure there is voltage to the motor leads. The on-winding overload may be tripped. Wait 15 minutes and try again. If you still do not get a reading, either the motor has failed or there might be a wiring problem between the control panel and pump (improper connection in the junction box).

3 PHASE PUMPS:

1. Use an amprobe to check the amperage of any of the black wires going to the pump.
2. Turn the hand-off-auto switch to the "HAND" position and compare the amperage reading to the values shown on the chart.
3. If you get a reading of 0, make sure there is voltage to the motor leads. Push the overload reset button on the overload relay in the control panel. If you still do not get a reading, either the motor had failed or there might be a wiring problem between the control panel and pump (improper connection in the junction box).
4. If you get high amperage readings on 2 black wires and a zero reading on the third, you have a single phase condition which could be caused by one of the following:
   A. One motor lead is not connected properly.
   B. You have lost 1 phase of the 3 phase power coming into the panel.
   C. One winding in the motor is open.

CHECKING PUMP AND FLOAT RESISTANCE

TO CHECK PUMP OR FLOAT, DISCONNECT INCOMING POWER AND REMOVE WIRES FROM THE TERMINAL BLOCK AND WITH AN OHMMETER CHECK THE MEASUREMENTS PER CHART.

CORD MEASURED	ITEM MEASURED	CORRECT READING	OHMMETER SETTING	IF YOU GET ANY OTHER READING CHECK FOR THE FOLLOWING:
Power Cord	Motor Winding (3 Phase) (Any Black to Black)	(See Chart)	R × 1	Damaged winding or cord or tripped heat sensor
Power Cord	Motor Winding (1 Phase) (White to Black)	(See Chart)	R × 1	Damaged winding or cord or tripped heat sensor
Power Cord	Ground to Motor Windings (Green to Black or White)	Infinity to 200	R × 100K	Damaged winding or cord moisture in motor
Float Cord	Ground to Float Contacts (Green to Black or White)	Infinity to 200	R × 100K	Water in float or damaged cord
Float Cord	Float Contacts (Black to White)	0 - Float on Infinity-Float off	R × 1	Switch has failed or damaged cord

NOTE: Readings may vary slightly depending on length of wire running to the motor and the accuracy of the measuring instrument.

TESTING COMPONENTS IN CONTROL BOX

WARNING:
To prevent electrical shock, disconnect power entering the control box and turn the circuit breaker in the control box to the "OFF" position.

CONTACTOR:
1. Physically examine the contactor for badly burnt or sticking contacts. The contactor arm should move in and out freely.
2. Remove the wires on the coil to the contactor and measure the resistance. Zero the ohmmeter, and on the R × 1 scale you should read approximately 138 ohms.
3. Often a burnt coil can be spotted by merely looking to see if it is badly discolored or has a dark burnt spot on it.

TRANSFORMER: (3 PHASE PANELS ONLY)
208 VOLT
1. Remove the wires from the primary side (H3-H4) and also from the secondary side (X2-XF-X1).
2. With an ohmmeter on the R × 1 scale touch terminals H3 and H4 (primary), you should get a reading of approximately 5.8 ohms.
3. With an ohmmeter on the R × 1 scale touch terminals X2 and X1 (secondary), you should get a reading of approximately 1.6 ohms.
4. With an ohmmeter on the R × 1 scale touch terminals XF and X1, you should get a reading of 0. If you do not, replace the fuse.

230 VOLT
1. Remove the wires from the primary side (H2-H4) and also from the secondary side (X2-XF-X1).
2. With an ohmmeter on the R × 1 scale touch terminals H2 and H4 (primary), you should get a reading of approximately 6.5 ohms.
3. With an ohmmeter on the R × 1 scale touch terminals X2 and X1 (secondary), you should get a reading of approximately 1.6 ohms.
4. With an ohmmeter on the R × 1 scale touch terminals XF and X1, you should get a reading of 0. If you do not, replace the fuse.

460 VOLT
1. Remove the wires from the primary side (H1-H4) and also from the secondary side (X2-XF-X1).
2. With an ohmmeter on the R × 1 scale touch terminals H1 and H4 (primary), you should get a reading of approximately 21.5 ohms.
3. With an ohmmeter on the R × 1 scale touch terminals X2 and X1 (secondary), you should get a reading of approximately 1.6 ohms.
4. With an ohmmeter on the R × 1 scale touch terminals XF and X1, you should get a reading of 0. If you do not, replace the fuse.

OVERLOAD BLOCK: (3 PHASE PANELS ONLY)
1. Remove the wires from the terminals on the side of the overload block.
2. With an ohmmeter on the R × 1 scale touch the two terminals, you should get a reading of 0. If you do not get this reading, push the large black reset button on the front of the overload block.
3. You may test the inner switching mechanism by pushing the small black button on the front of the overload block to trip the switch and pushing the large black button to reset it. If the inner switch does not work properly replace the overload block.

OVERLOAD HEATERS: (3 PHASE PANELS ONLY)
1. Remove the heaters from the overload block and examine them for physical damage. A slight discoloration is normal, but if they are melted or warped they should be replaced.

FUSES:
1. Pull the fuse out of the fuse block and check for continuity with an ohmmeter.
2. With the ohmmeter on the R × 1 scale, you should get a reading of 0. If you do not, replace it with the same type and rating that is shown on the decal located next to the fuse block.

ALARM BUZZER: (NEMA 1 ENCLOSURES)
1. The buzzer should activate when the alarm test switch is used, if not:

   With the ohmmeter on the R × 100 scale touch the WH/RED wire on the alarm test switch, and the white wire on the pump run light. You should get a reading of approximately 12.0 (1200 ohms). If you do not replace the buzzer.

ALARM LIGHT: (NEMA 4X ENCLOSURES)
1. The light should activate when the alarm test switch is used, if not replace the light bulb.

OVERRIDE RELAY:
1. Physically examine the relay for burnt or stuck contacts and for a burnt or discolored coil.
2. Remove the relay from the socket and with an ohmmeter or R × 1000 scale, you should read approximately 7.68 ohms on pins 13 and 14.

ALTERNATOR RELAY:
1. When power is on and the relay is functioning properly, one of the two lights on top of the relay should be on.
2. With circuit breaker turned "off," remove relay from socket. With an ohmmeter on the R × 1000 scale, touch the alternator coil terminals. The "black" lead should be on pin 3, and the "red" lead should be on pin 5. You should have a reading of approximately 920-1020 ohms.
3. If alternator shows physical damage or does not test properly, replace it.

TROUBLESHOOTING CHART

Problem	Position of Hand-Auto Switch	Run Light	Check
Pump 1 AND 2 Will Not Run	Hand	On	G-A-L-K
	Hand	Off	C-E-B-G
	Auto	On	A-G-L-K
	Auto	Off	F-I-C-B-E-G
Pump 1 OR 2 Will Not Run	Hand	On	A-G-K
	Hand	Off	C-G-L
	Auto	On	A-G-K-L
	Auto	Off	M-F-G
Alarm Activates	Auto	Both Lights On	H-I-J
	Auto	Only One Light On	G-D
	Auto	No Run Light On	E-L
Circuit Breaker Tripped	Auto-Off-Hand	Off	G-N
Fuse in Control Circuit Blown	Auto-Off-Hand	Off	H-I-J
Control Box Buzzes	Auto-Off-Hand	On Or Off	L

CAUSE	REMEDY
A Motor overload tripped.	(1 PHASE ONLY). Wait 5 min. The thermal overload will reset automatically. (If pump is out of water or in warm water, it will take longer for the overload to reset). If the overload trips again, service pump.
	(3 PHASE ONLY). Reset by pushing overload reset button. If overload does not trip again problem may be fixed. If overload trips again, check power supply voltage. Check motor winding resistance, make sure pump shaft is not locked.
B Tripped circuit breaker or fuse at power supply panel —wrong supply voltage.	Reset breakers or replace fuses. If they continue to blow, check amp capacity of wire and breakers. Make sure it is wired properly and that you have the correct power supply system. (See instructions "Power Supply").
C Tripped circuit breaker in control panel.	Reset by pushing handle down to "OFF" position and resetting to "ON" position. Make sure that wires are not shorted and that the box is wired properly.
D Override relay not working properly.	Try operating both pumps in "HAND" position. If the run lights come on and pumps operate properly. Replace override relay.
E Control circuit fuse blown.	Check fuse per instructions. Replace fuse with same type and rating.
F Level in basin may not be high enough to turn switch on.	Check basin. Run pump manually to see if pump operates properly.
G May not be wired properly.	Check wiring per wiring diagram. Make sure pump is connected to terminal block properly.
H Too much water coming into basin.	Reduce water flow. Pump may need servicing.
I Float switch may have failed.	Operate manually to see if basin pumps down and alarm goes off. Repair float if necessary.
J Pump or discharge line may be plugged.	Pull pump and check discharge line and pump inlet. (CAUTION: Never put hands on grinder impeller unless power is turned off).
K May be failed component operating coil.	Check components per instructions.
L Wrong operating voltage or wrong voltage components.	Check voltage and make sure relays and contactors are of the proper voltage.
M May not be lead pump in alternating phase—alternator may not be working properly.	Let float switches cycle basin to see if alternator is alternating pumps. If not, check alternator relay per instructions.
N May be short circuit in wiring or pump power supply—Short in motor.	Check wiring. (Short will not be located in control circuit unless control circuit fuse is blown). Check motor. (See chart for checking pump cable).

PUMP CURRENT DRAW, WINDING RESISTANCE, OVERLOAD HEATER SELECTION*

MODEL	HP	VOLTAGE	PHASE	RPM	F.L.A.	L.R.A.	RESISTANCE	HEATER	HEATER NO.
SS25	1/4	115	1	1750	8.0	12.0	2.30	—	—
SS4-11	4/10	115	1	1750	12.0	18.0	1.20	—	—
SS4-21	4/10	230	1	1750	6.0	9.8	4.30	—	—
SR4-11	4/10	115	1	1750	12.0	16.0	1.20	—	—
SR4-21	4/10	230	1	1750	6.0	8.2	4.30	—	—
WHR5-11	1/2	115	1	1750	12.0	20.2	1.33-1.47	—	—
WHR5-21	1/2	230	1	1750	6.0	9.1	5.04-5.60	—	—
WHR5-03	1/2	208	3	1750	3.6	8.0	10.9-12.1	K32	13621A098
WHR5-23	1/2	230	3	1750	3.2	7.5	13.5-14.9	K31	13621A080
WHR5-43	1/2	460	3	1750	1.6	3.8	54.0-59.6	K21	13621A109
WHR7-21	3/4	230	1	1750	7.5	12.5	3.96-4.40	—	—
WHR7-03	3/4	208	3	1750	5.3	16.5	4.87-5.37	K37	13621A088
WHR7-23	3/4	230	3	1750	4.2	10.8	9.17-10.2	K34	13621A104
WHR7-43	3/4	460	3	1750	2.1	5.4	36.7-40.6	K26	13621A086
WHR10-21	1	230	1	1750	11.0	20.5	2.60-2.88	—	—
WHR10-03	1	208	3	1750	6.2	20.5	3.32-3.66	K41	13621A081
WHR10-23	1	230	3	1750	5.2	17.5	4.87-5.40	K37	13621A088
WHR10-43	1	460	3	1750	2.8	8.7	19.5-21.6	K29	13621A087
WHRE&H5-11	1/2	115	1	3450	14.4	27.5	.83-.94	—	—
WHRE&H5-21	1/2	230	1	3450	7.2	14.2	4.40-4.86	—	—
WHRE&H5-03	1/2	208	3	3450	5.9	12.5	5.40-6.10	K39	13621A093
WHRE&H5-23	1/2	230	3	3450	4.8	11.8	7.00-8.00	K36	13621A082
WHRE&H5-43	1/2	460	3	3450	2.4	6.0	28.0-32.0	K26	13621A086
WHRE&H10-21	1	230	1	3450	9.0	18.5	2.84-3.14	—	—
WHRE&H10-03	1	208	3	3450	6.5	22.5	3.15-3.65	K41	13621A081
WHRE&H10-23	1	230	3	3450	5.5	20.3	4.85-5.42	K39	13621A093
WHRE&H10-43	1	460	3	3450	2.75	10.5	19.4-21.7	K29	13621A087
WHRE&H20-21	2	230	1	3450	14.5	25.4	1.60-1.80	—	—
WHRE&H20-03	2	208	3	3450	10.5	34.0	2.65-2.93	K52	13621A097
WHRE&H20-23	2	230	3	3450	8.5	32.5	3.12-3.45	K49	13621A062
WHRE&H20-43	2	460	3	3450	4.9	16.3	12.5-13.8	K36	13621A082
E3-11	1/3	115	1	3450	14.0	25.0	.90-1.1	—	—
E3-21	1/3	230	1	3450	7.0	13.0	3.4-3.6	—	—
E10-21	1	230	1	1750	10.7	32.0	2.5-3.0	—	—

***WARNING:** On 3 phase panels, overload heater elements are not factory installed in the overload relay. Elements must be purchased separately and correspond with the above chart. This must be done **before** the panel is put into service. Failure to install the elements before the panel is put into service, or failure to install the correct size elements, may result in pump failure. All pump and panel warranties will be voided if the above guidelines are not followed.

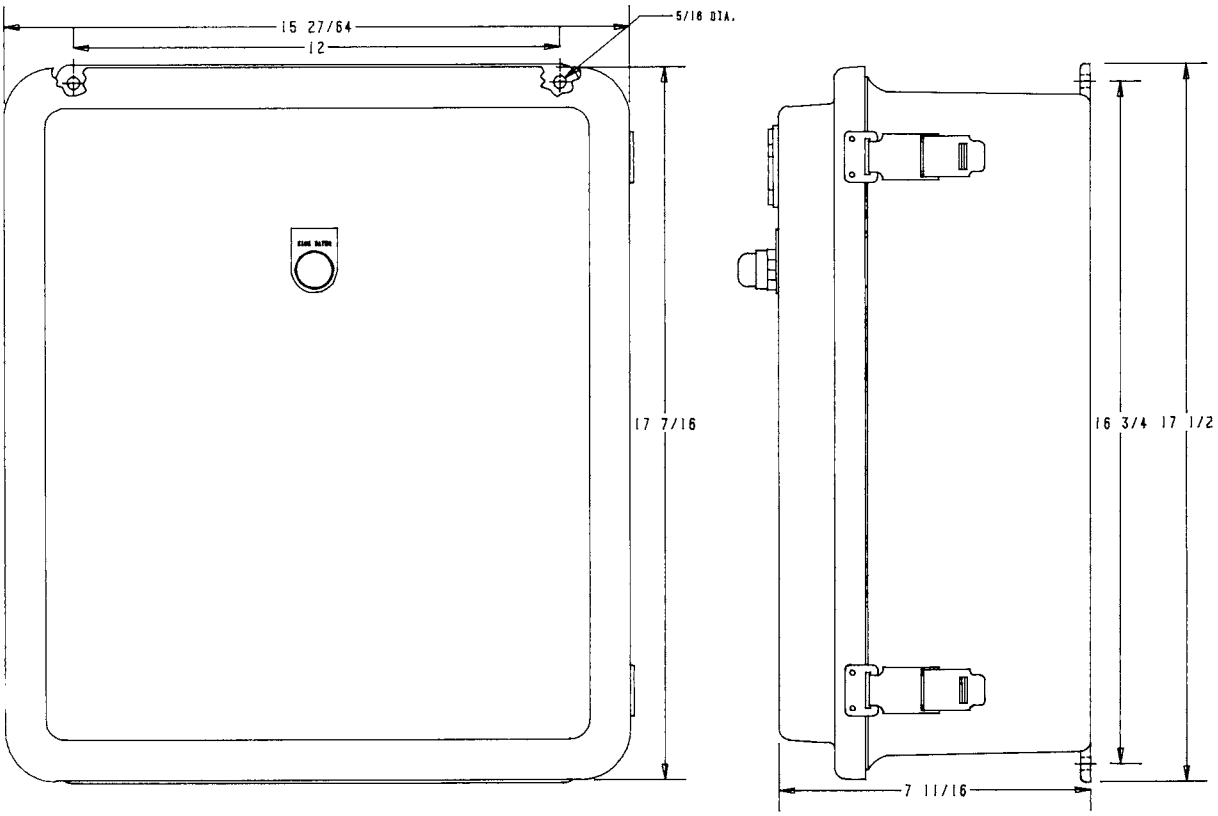

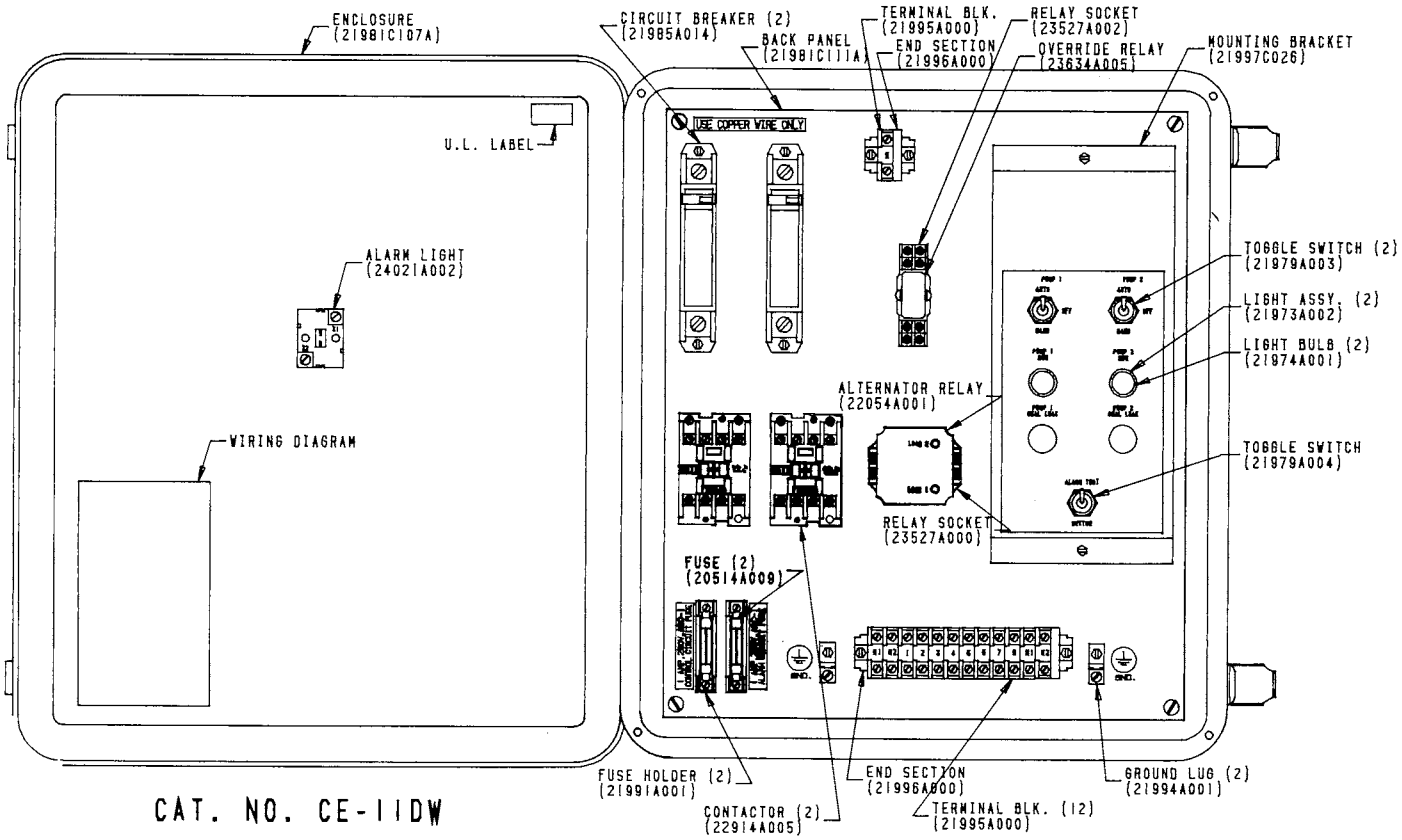

CAT. NO. CE-11DW

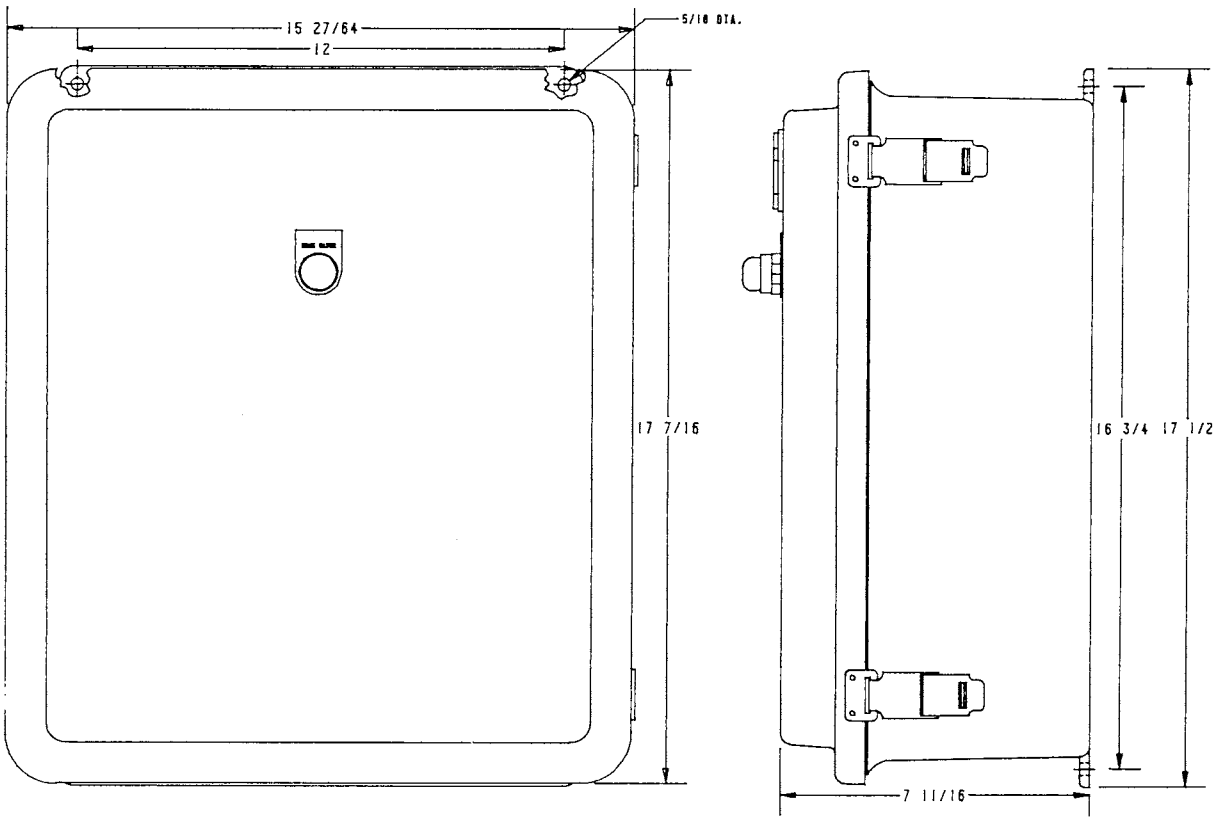

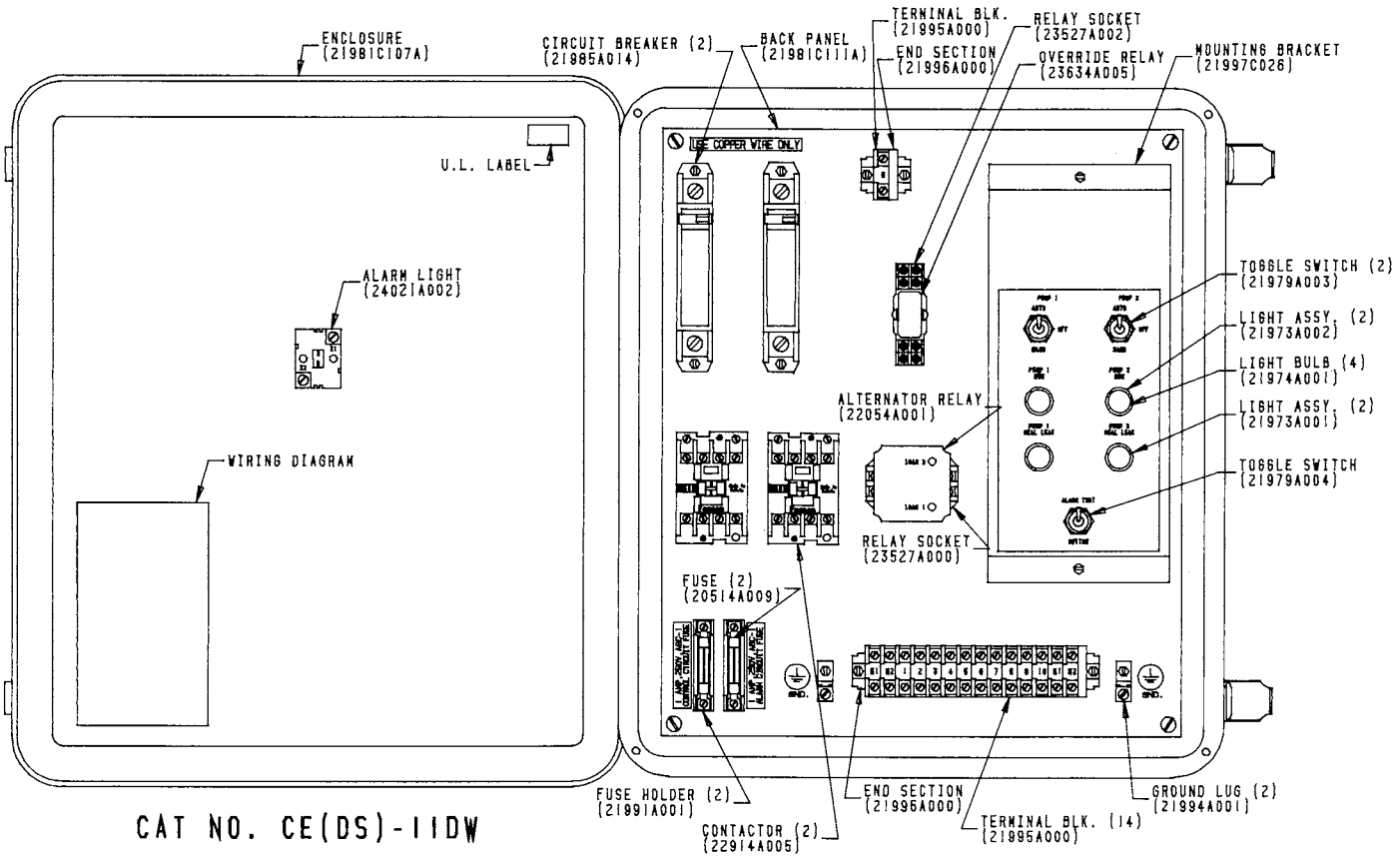

CAT NO. CE(DS)-11DW

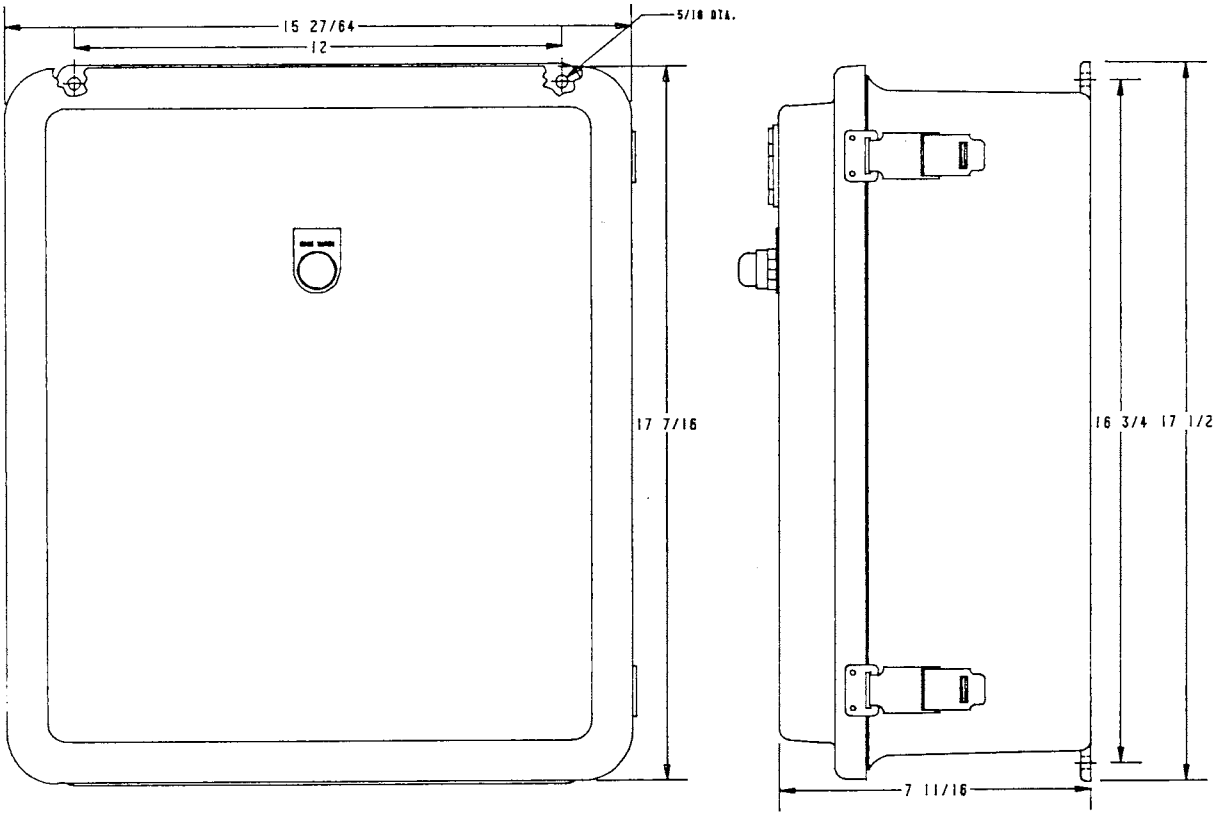

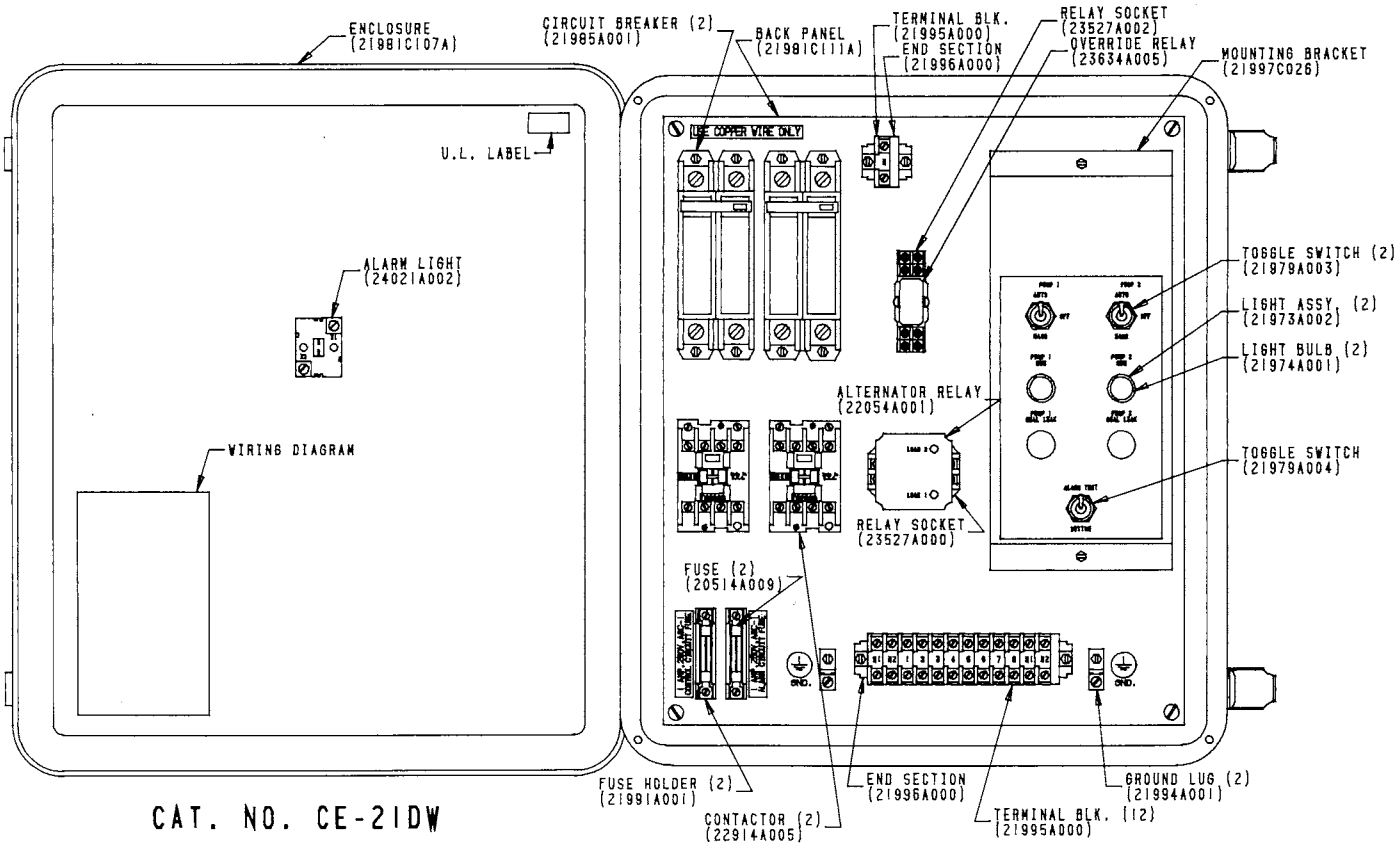

CAT. NO. CE-21DW

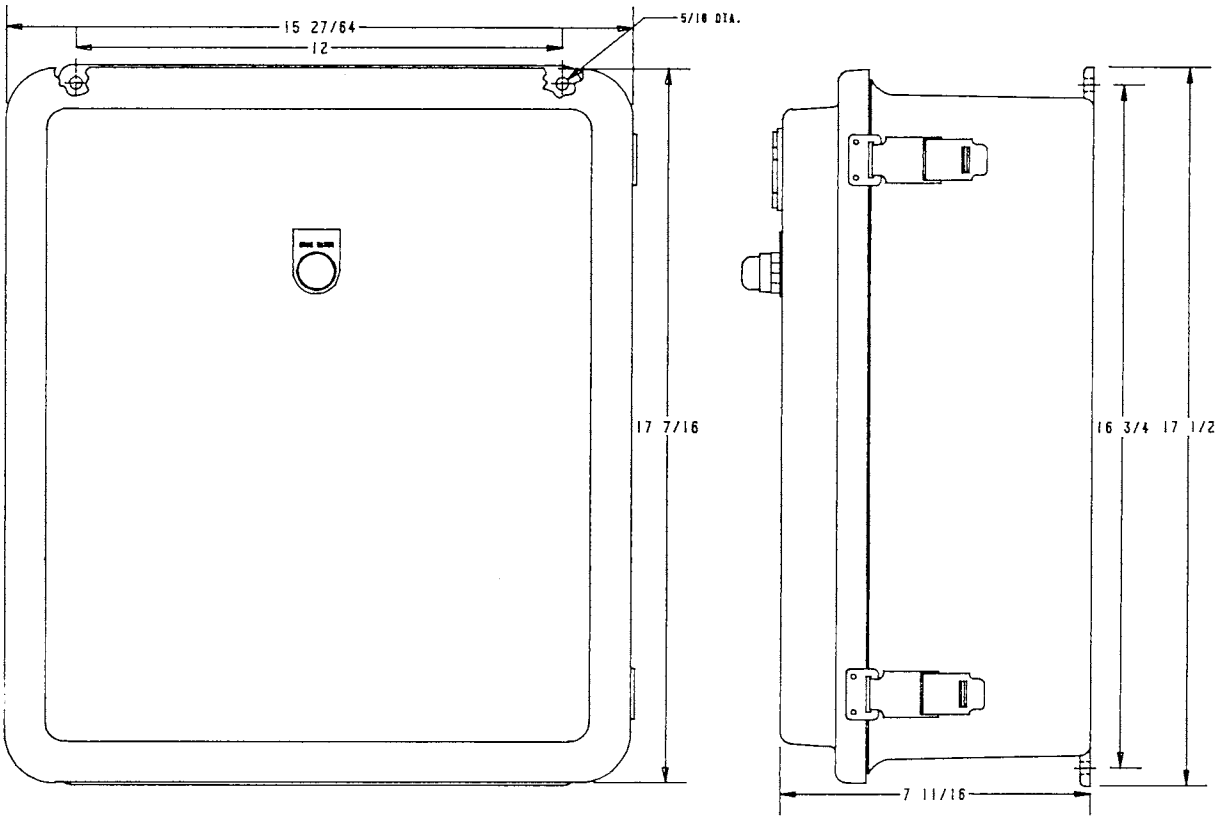

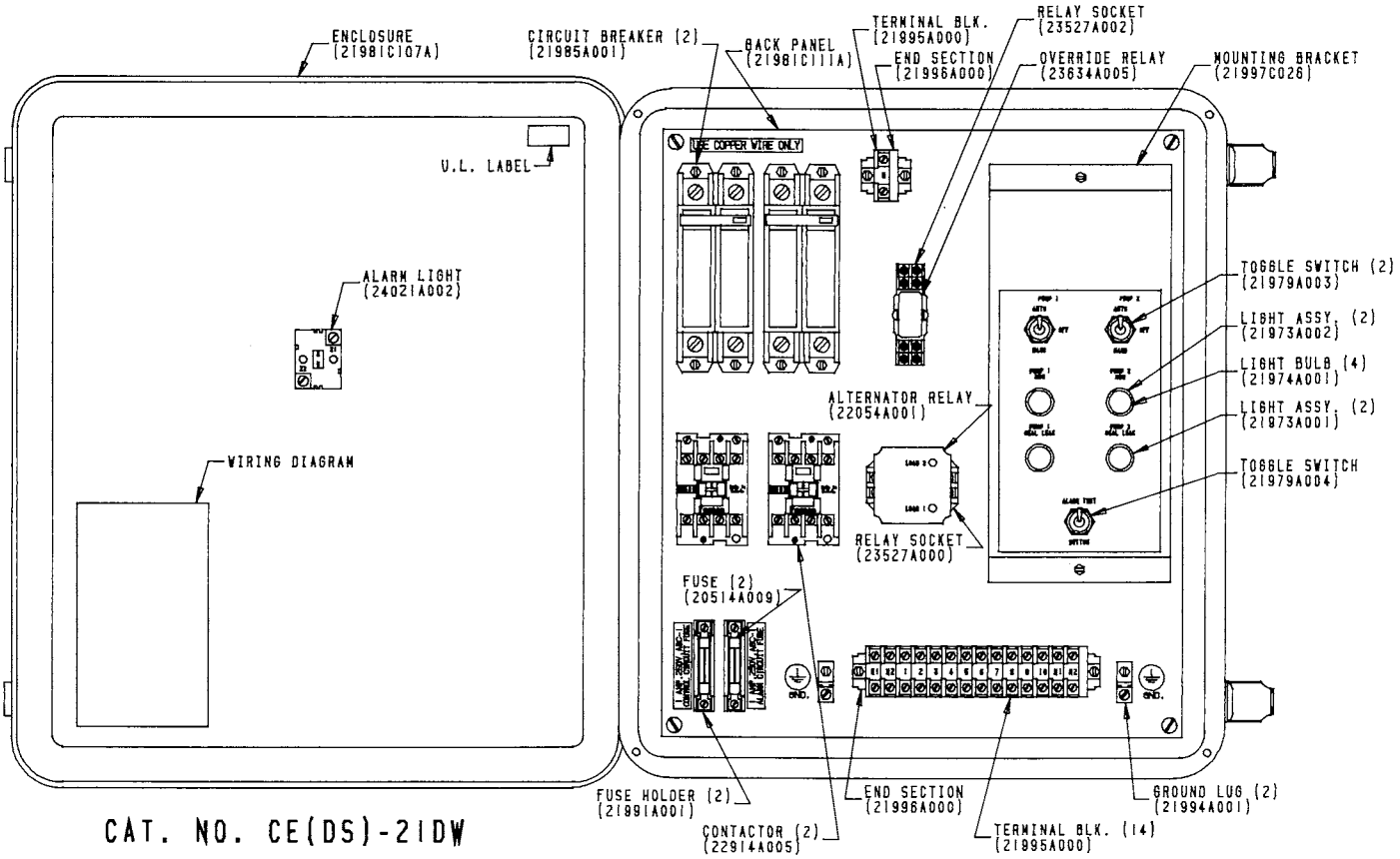

CAT. NO. CE(DS)-21DW

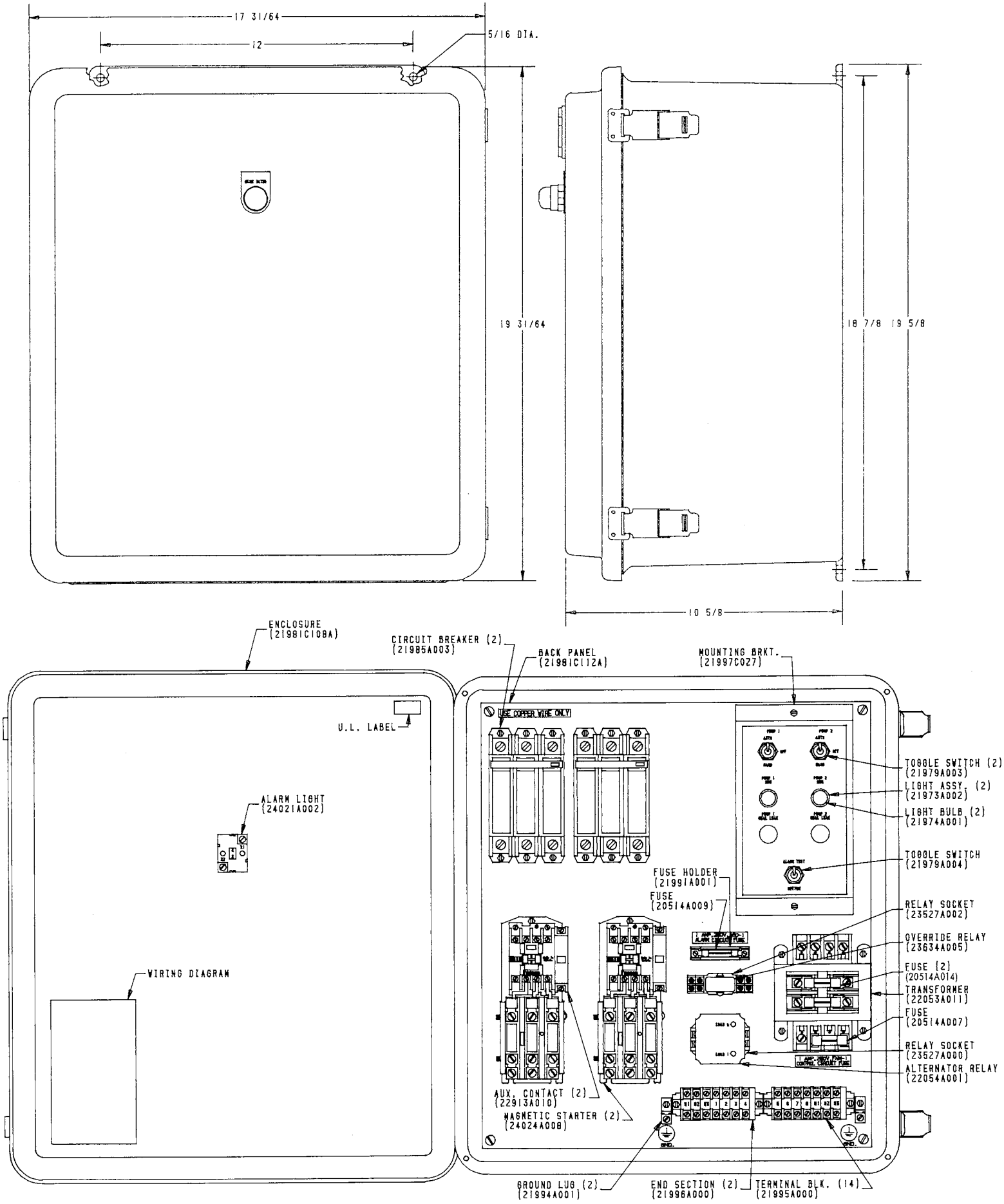

CAT. NO. CE-23DW

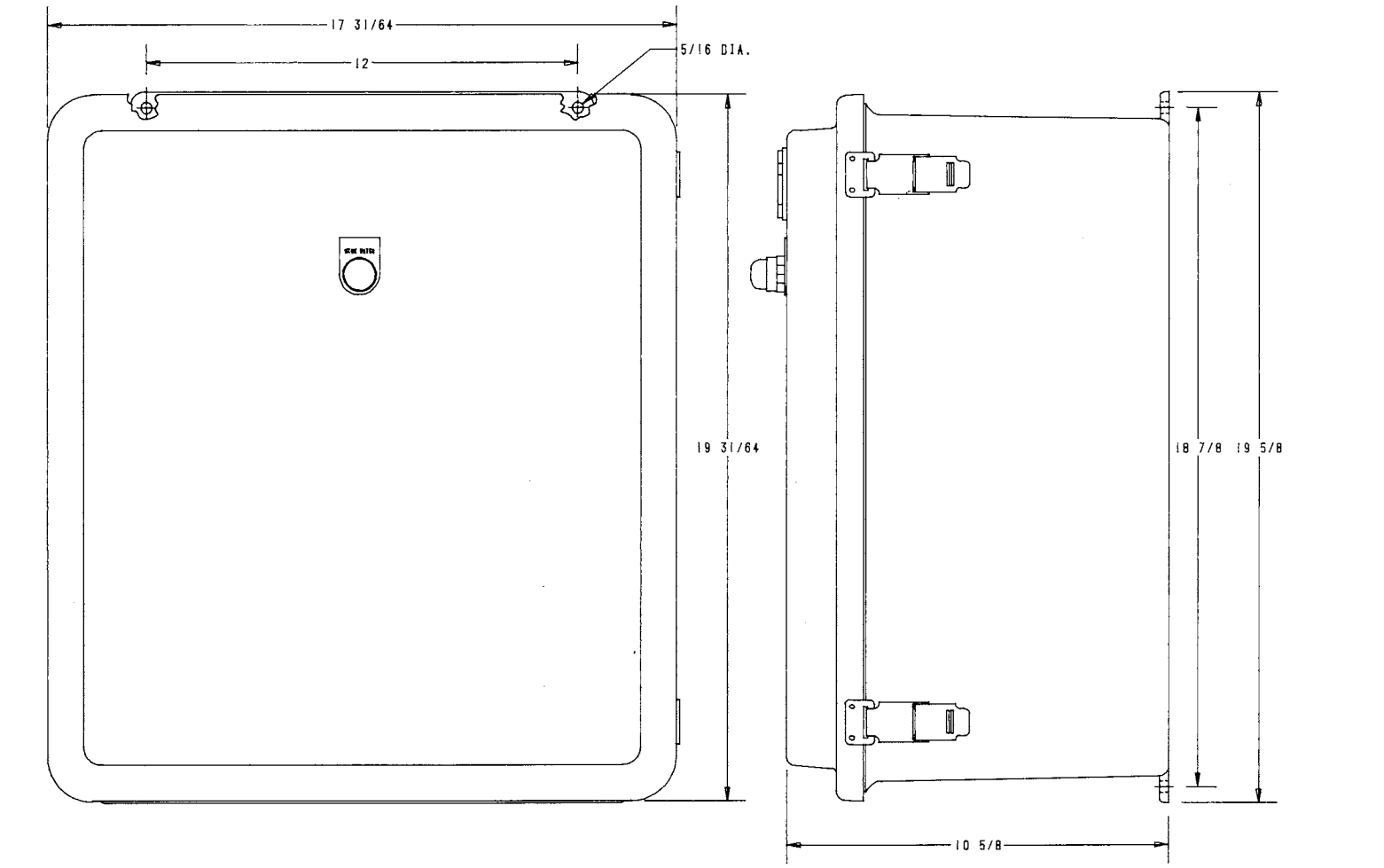

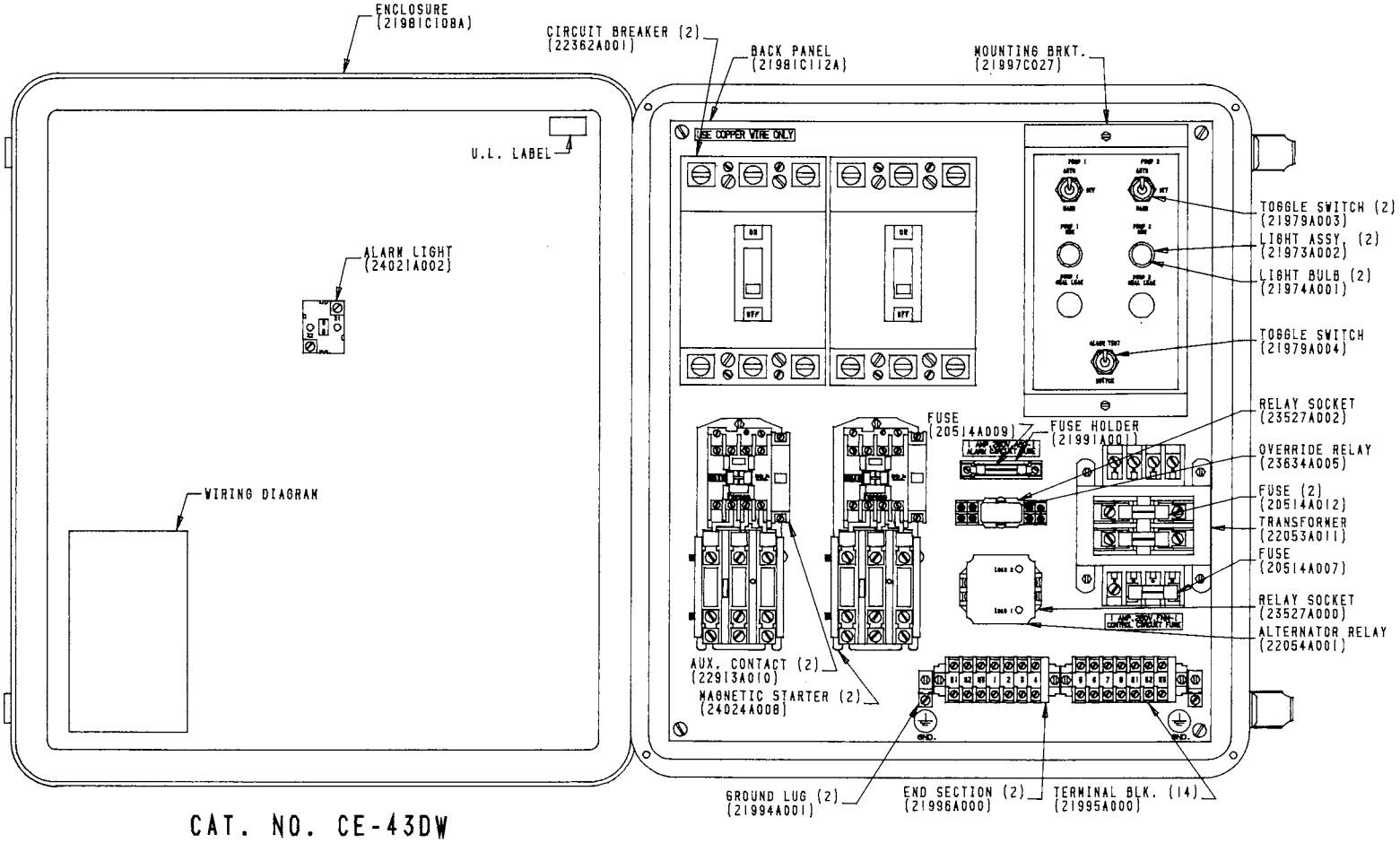

CAT. NO. CE-43DW

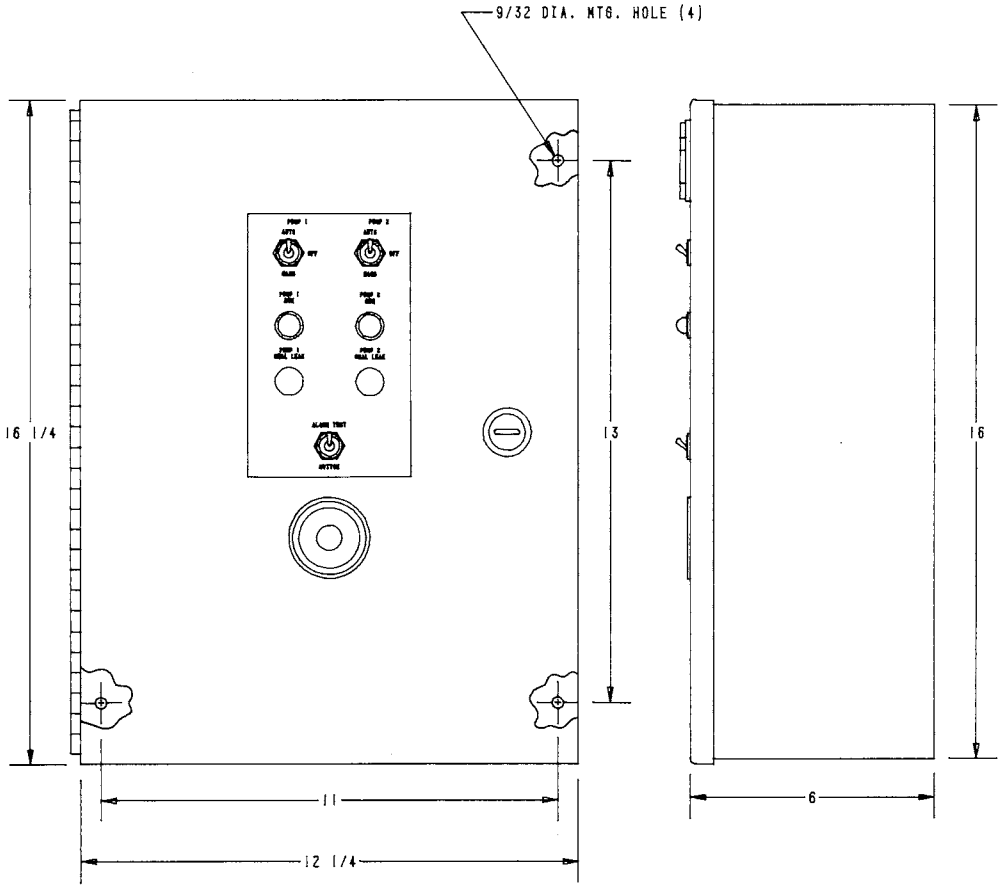
9/32 DIA. MTG. HOLE (4)
16 1/4
13
16
11
6
12 1/4

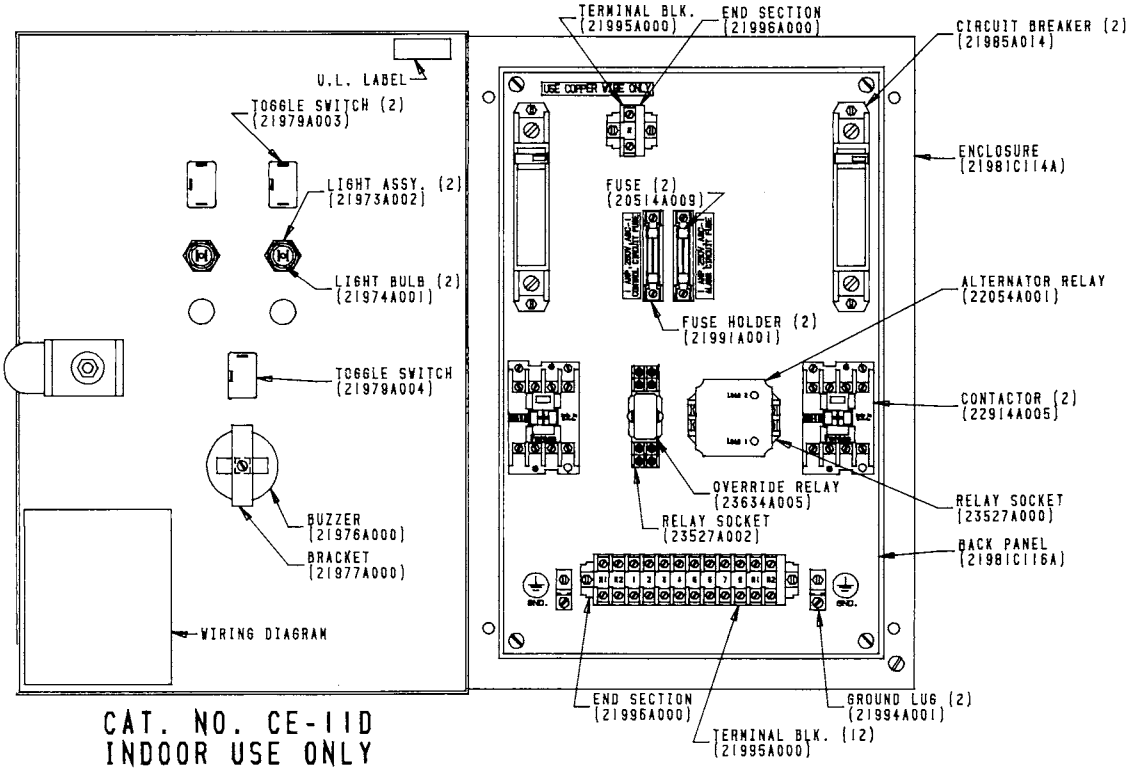
TERMINAL BLK. (21995A000)
END SECTION (21996A000)
CIRCUIT BREAKER (2) (21985A014)
U.L. LABEL
TOGGLE SWITCH (2) (21979A003)
ENCLOSURE (21981C114A)
LIGHT ASSY. (2) (21973A002)
FUSE (2) (20514A009)
LIGHT BULB (2) (21974A001)
ALTERNATOR RELAY (22054A001)
FUSE HOLDER (2) (21991A001)
TOGGLE SWITCH (21979A004)
CONTACTOR (2) (22914A005)
OVERRIDE RELAY (23634A005)
RELAY SOCKET (23527A000)
BUZZER (21976A000)
RELAY SOCKET (23527A002)
BACK PANEL (21981C116A)
BRACKET (21977A000)
WIRING DIAGRAM
END SECTION (21996A000)
GROUND LUG (2) (21994A001)
TERMINAL BLK. (12) (21995A000)
CAT. NO. CE-11D
INDOOR USE ONLY

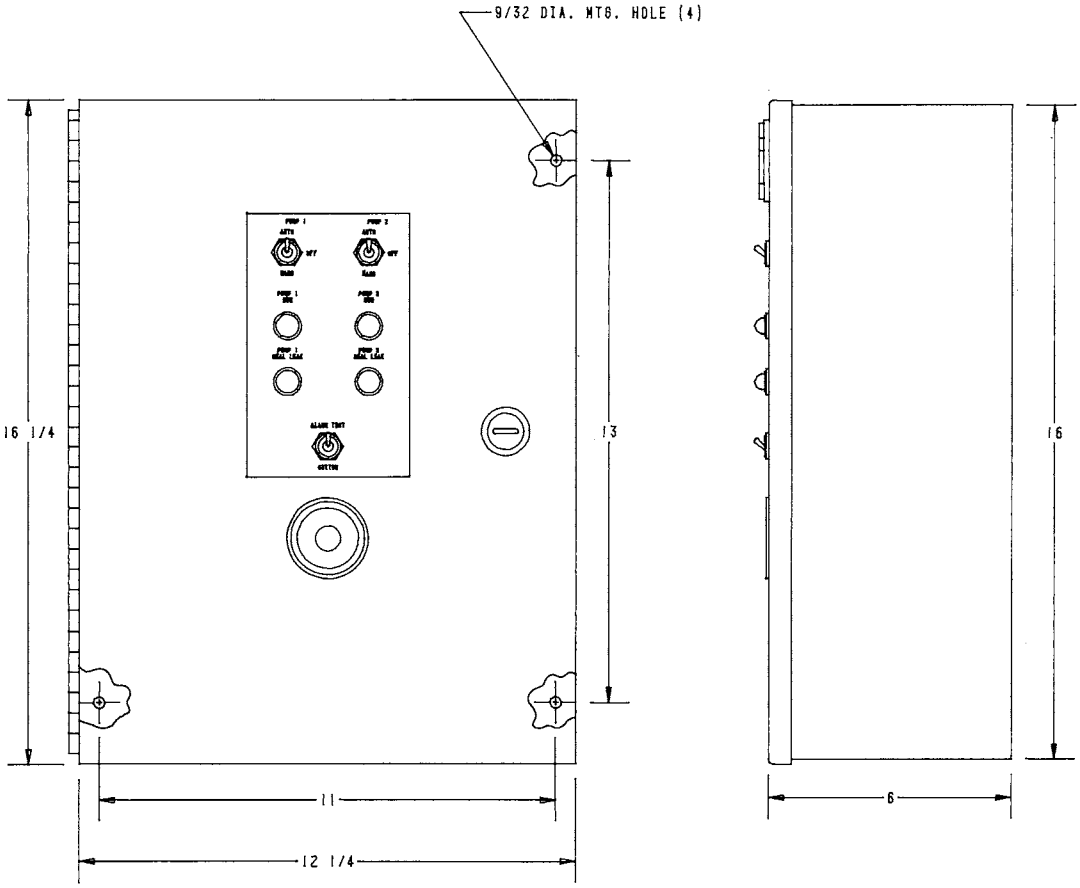

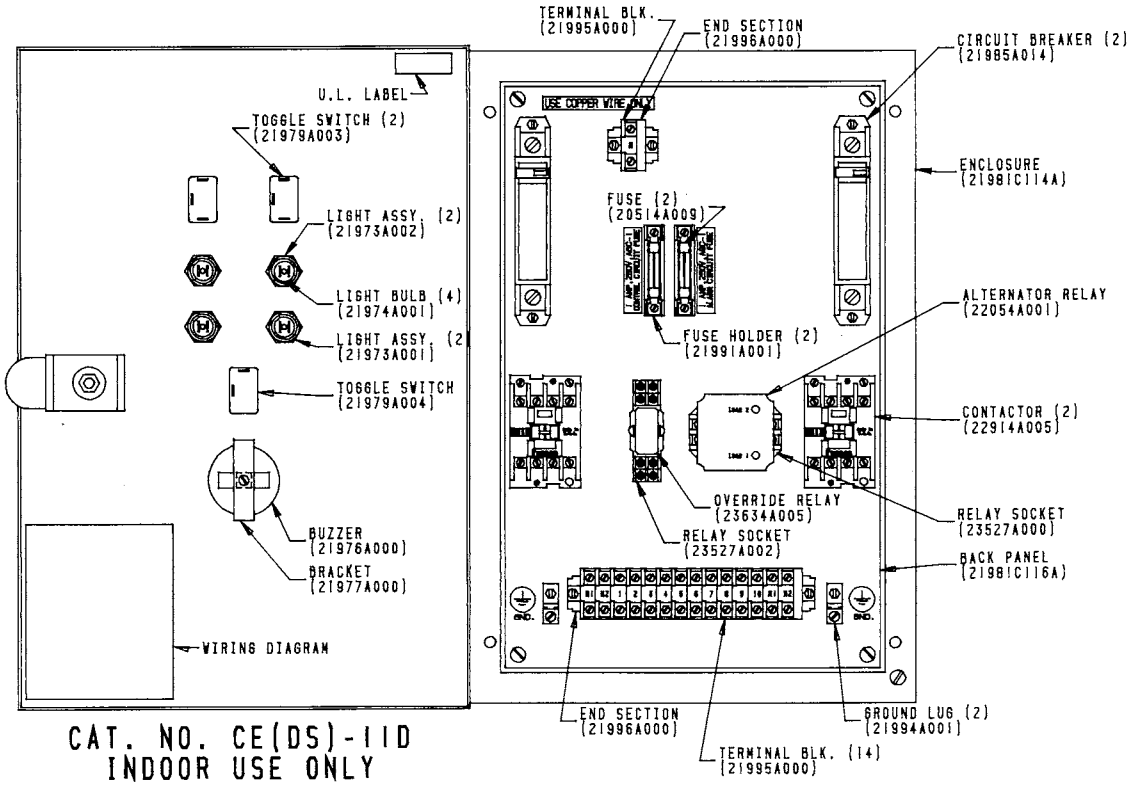

CAT. NO. CE(DS)-11D
INDOOR USE ONLY

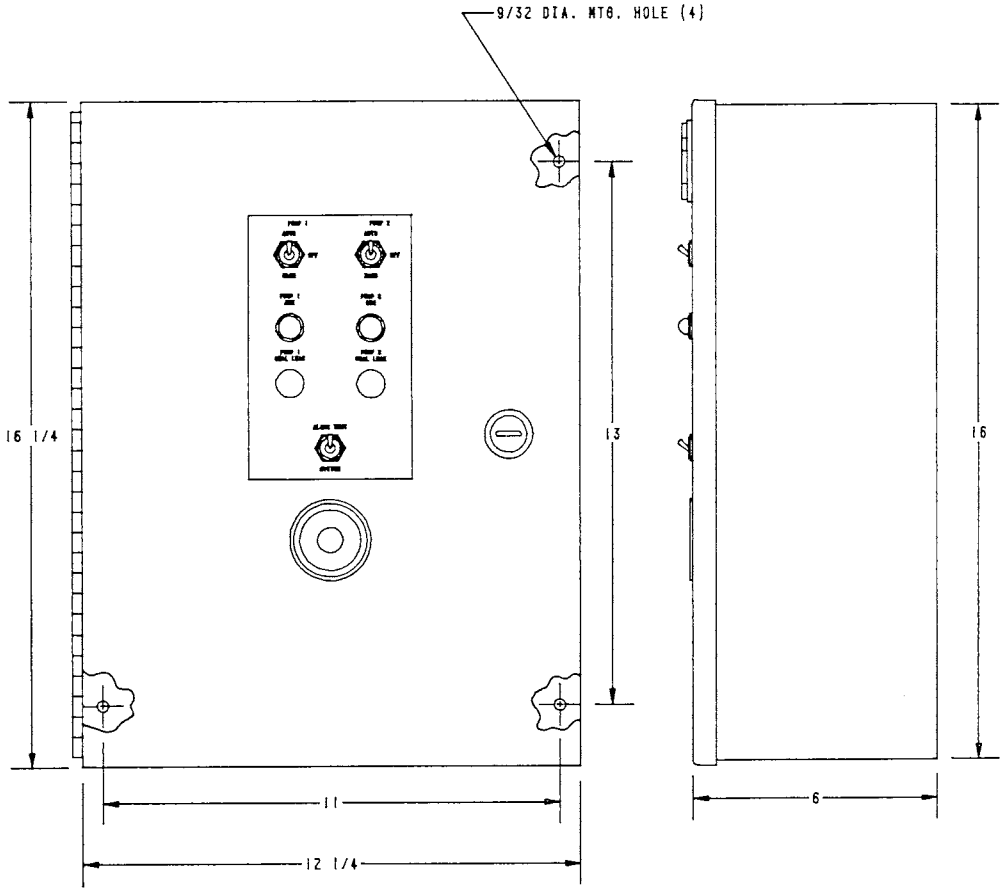

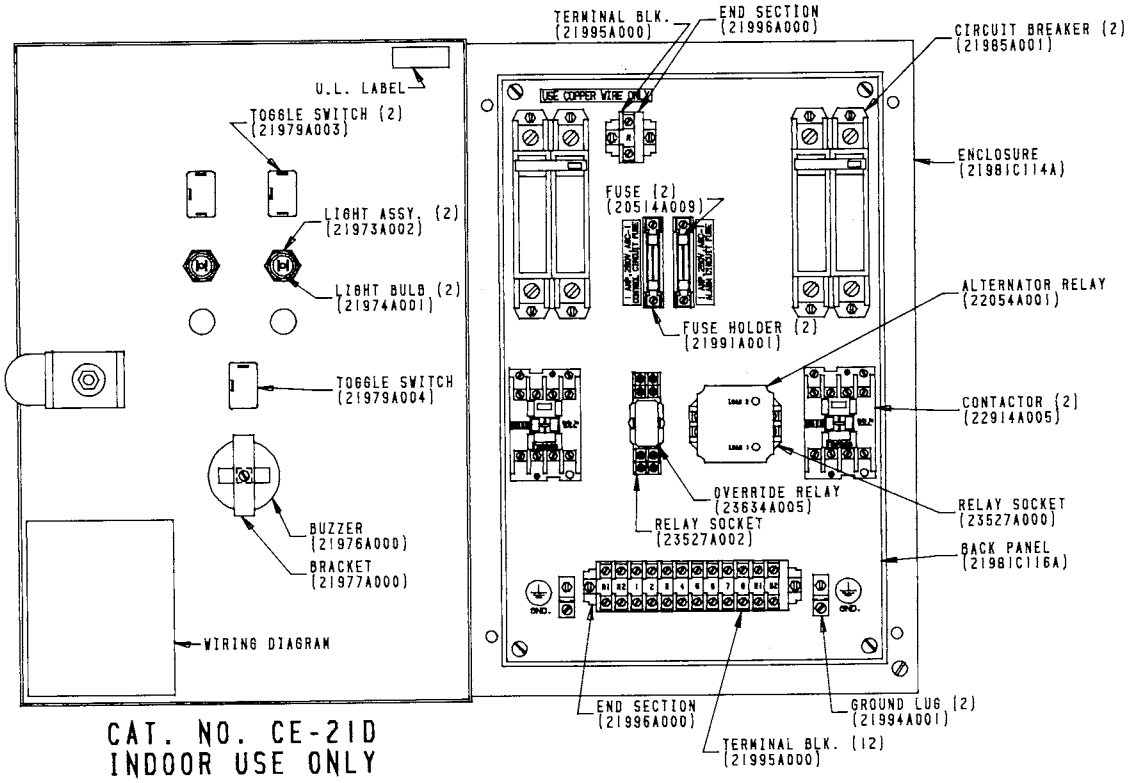

CAT. NO. CE-21D
INDOOR USE ONLY

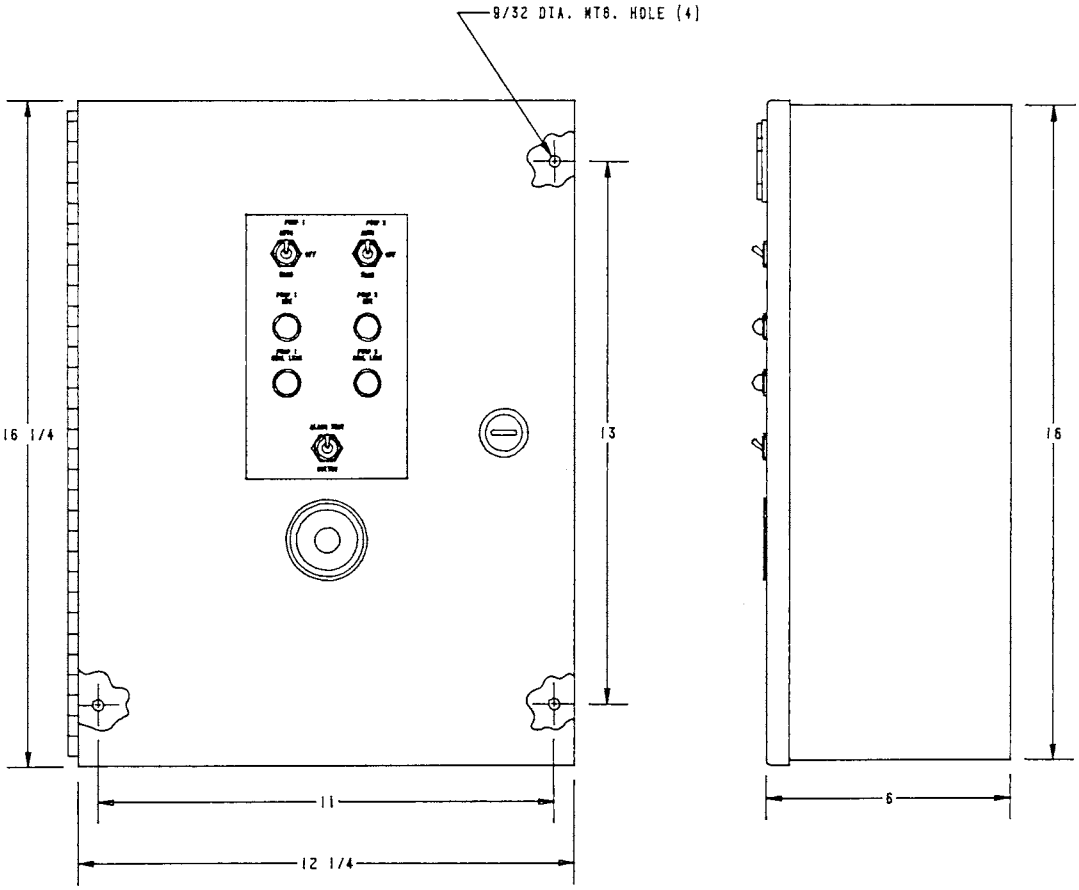

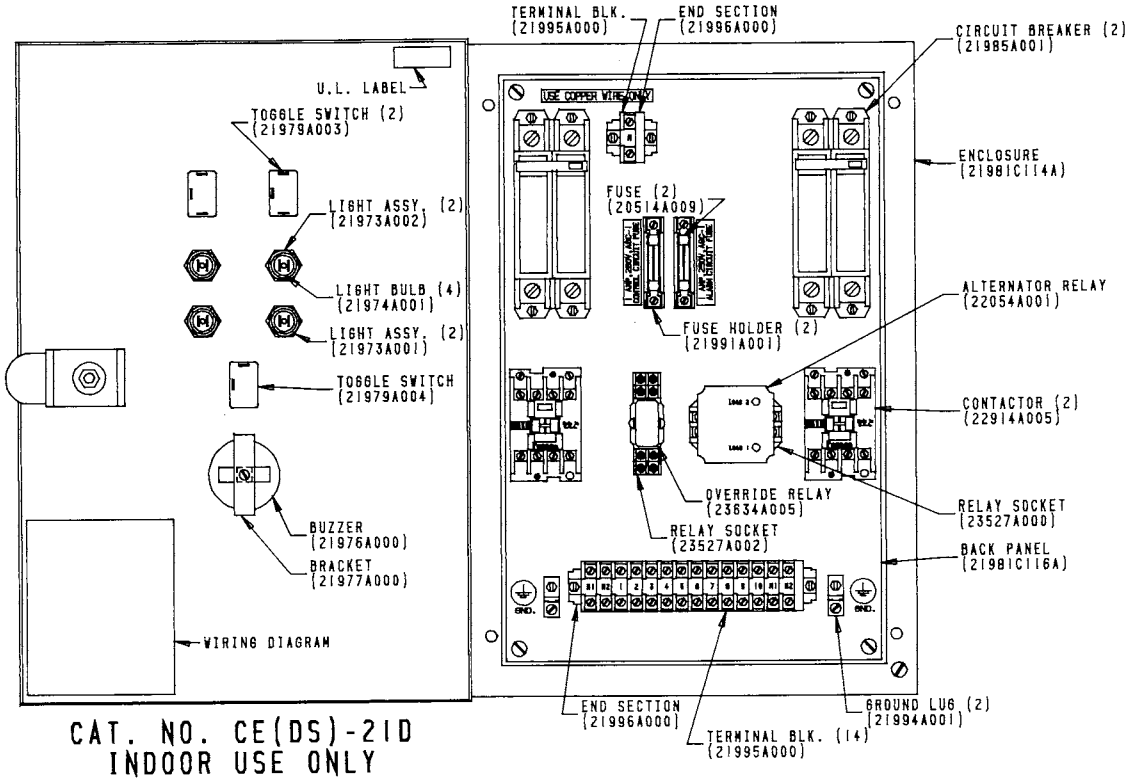

CAT. NO. CE(DS)-21D
INDOOR USE ONLY

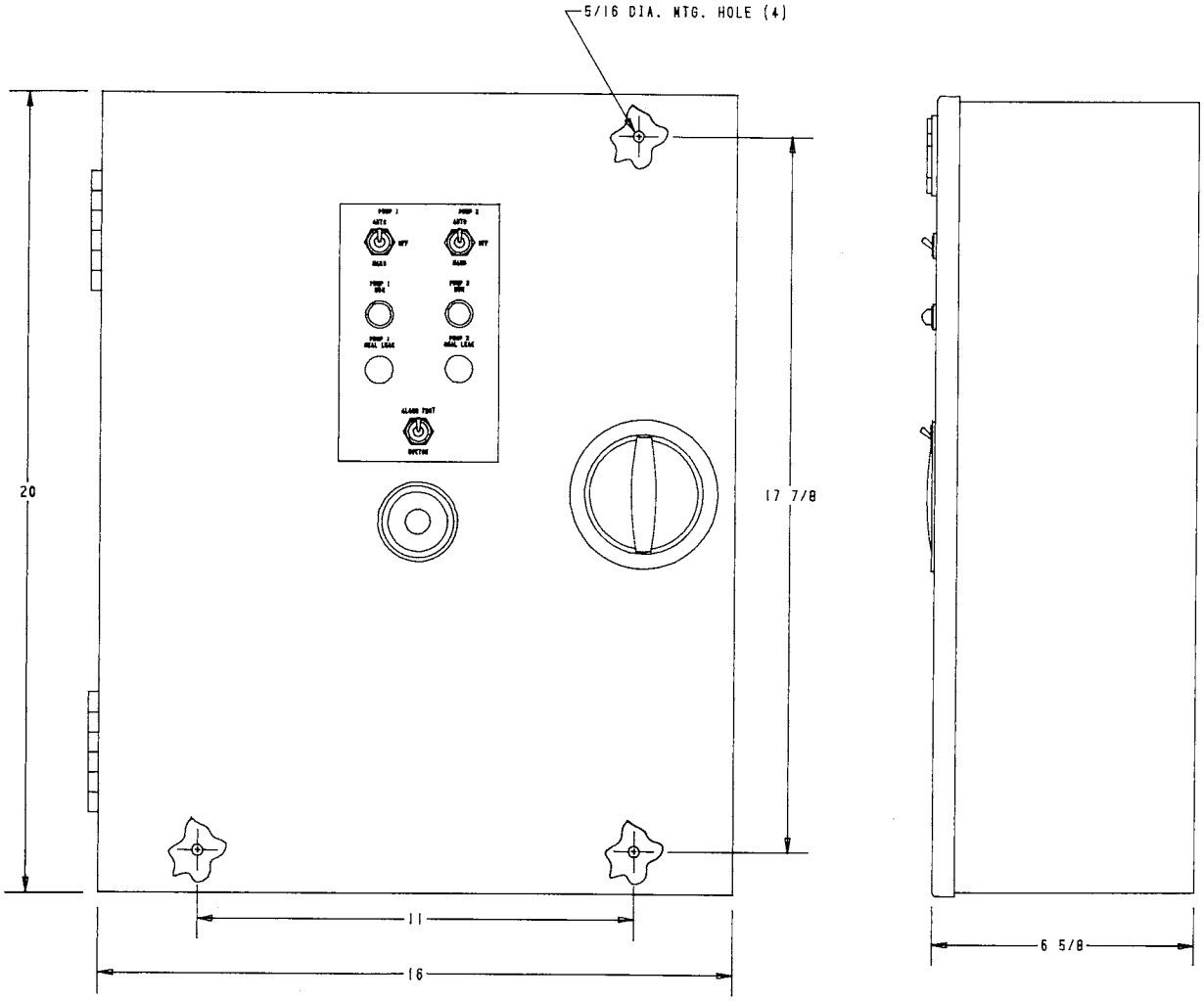

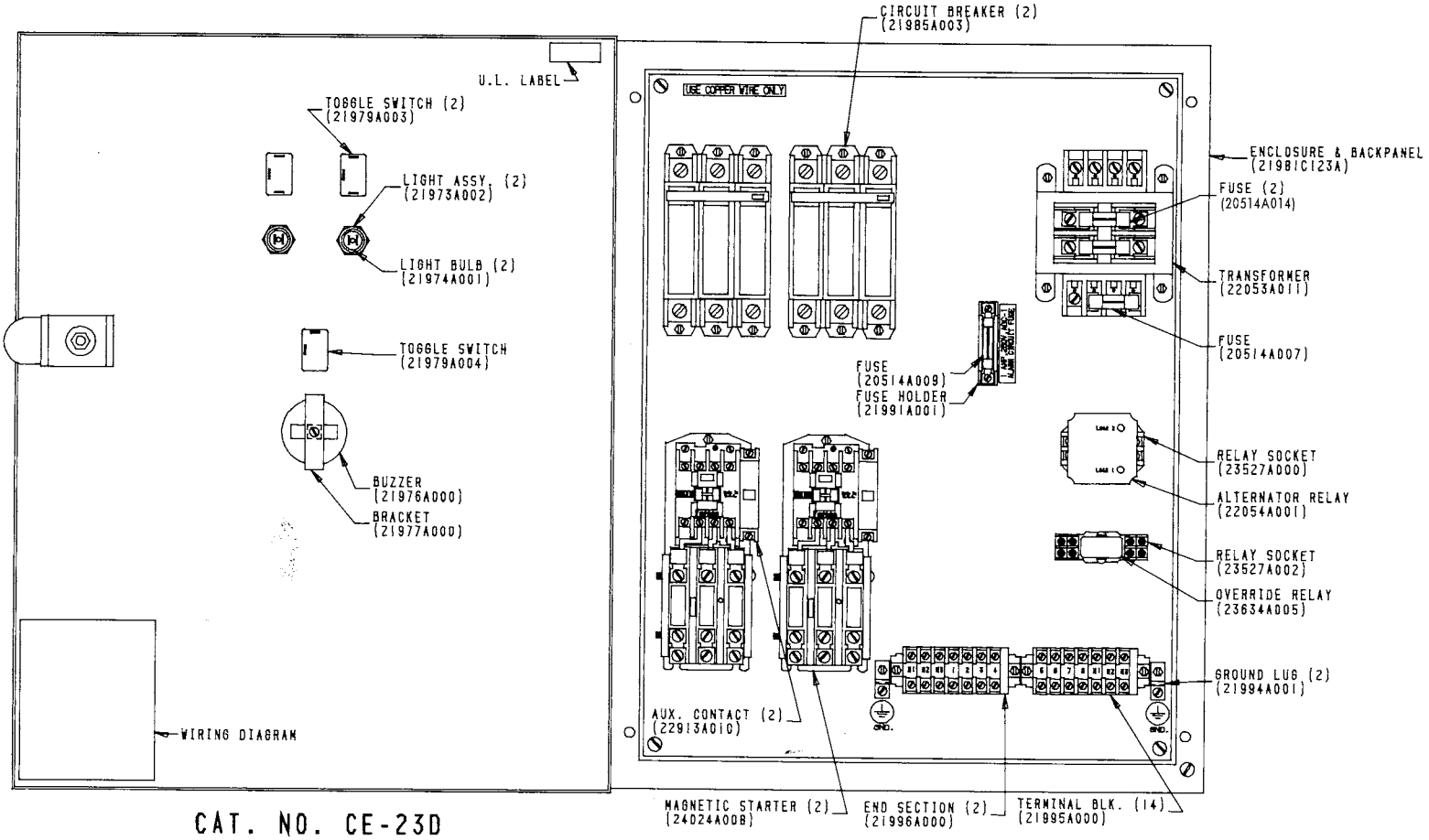

CAT. NO. CE-23D
INDOOR USE ONLY

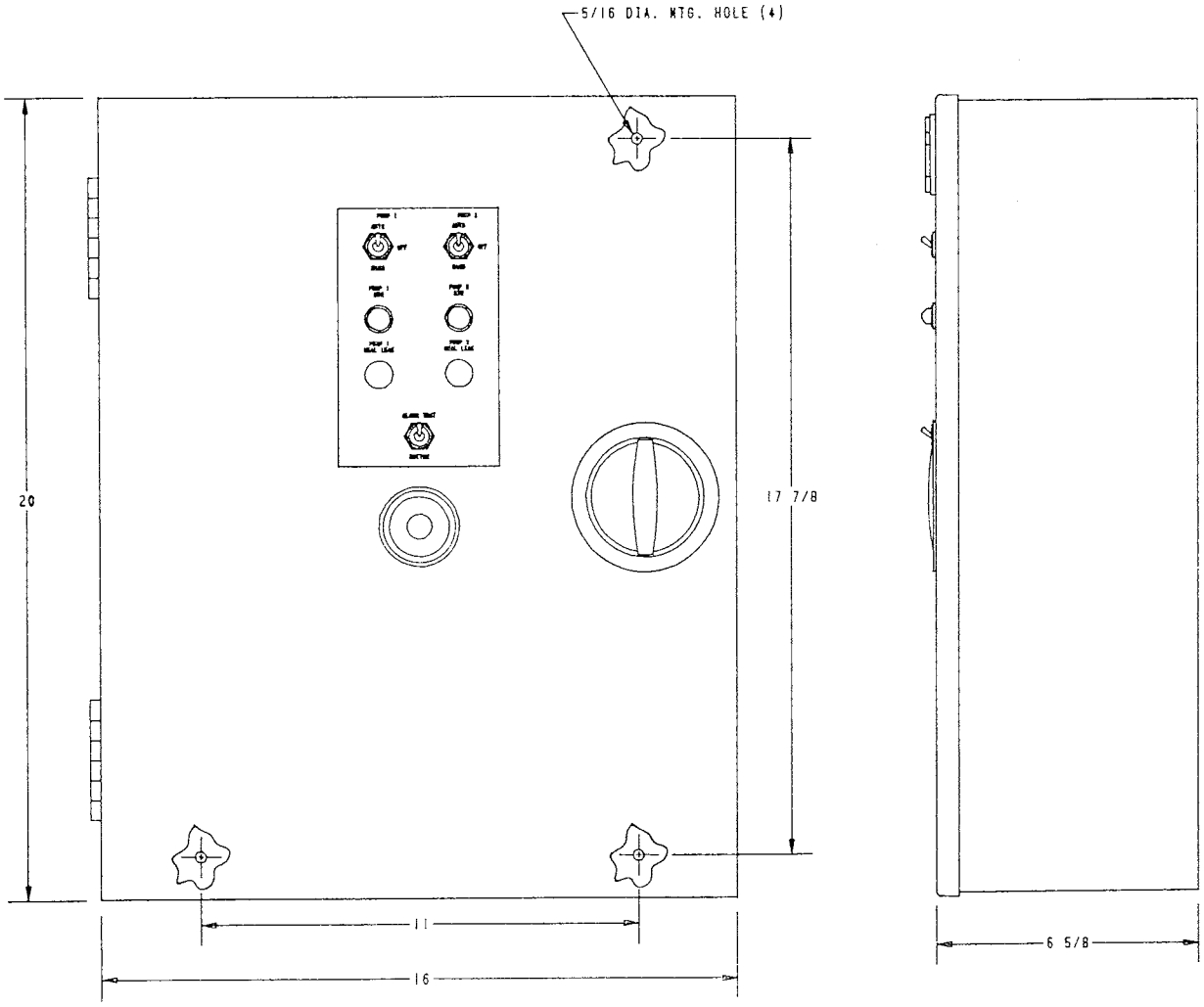

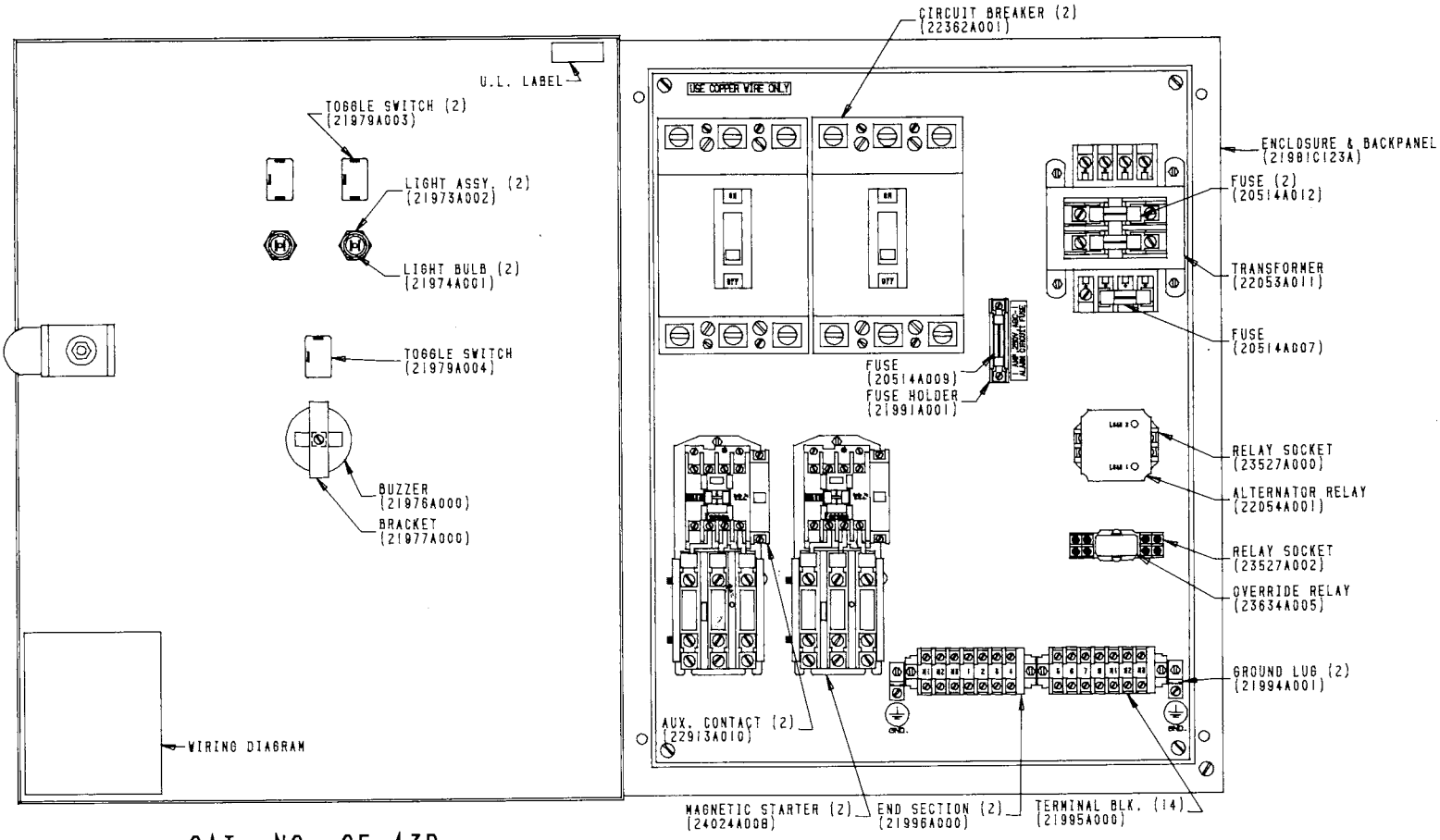

CAT. NO. CE-43D
INDOOR USE ONLY

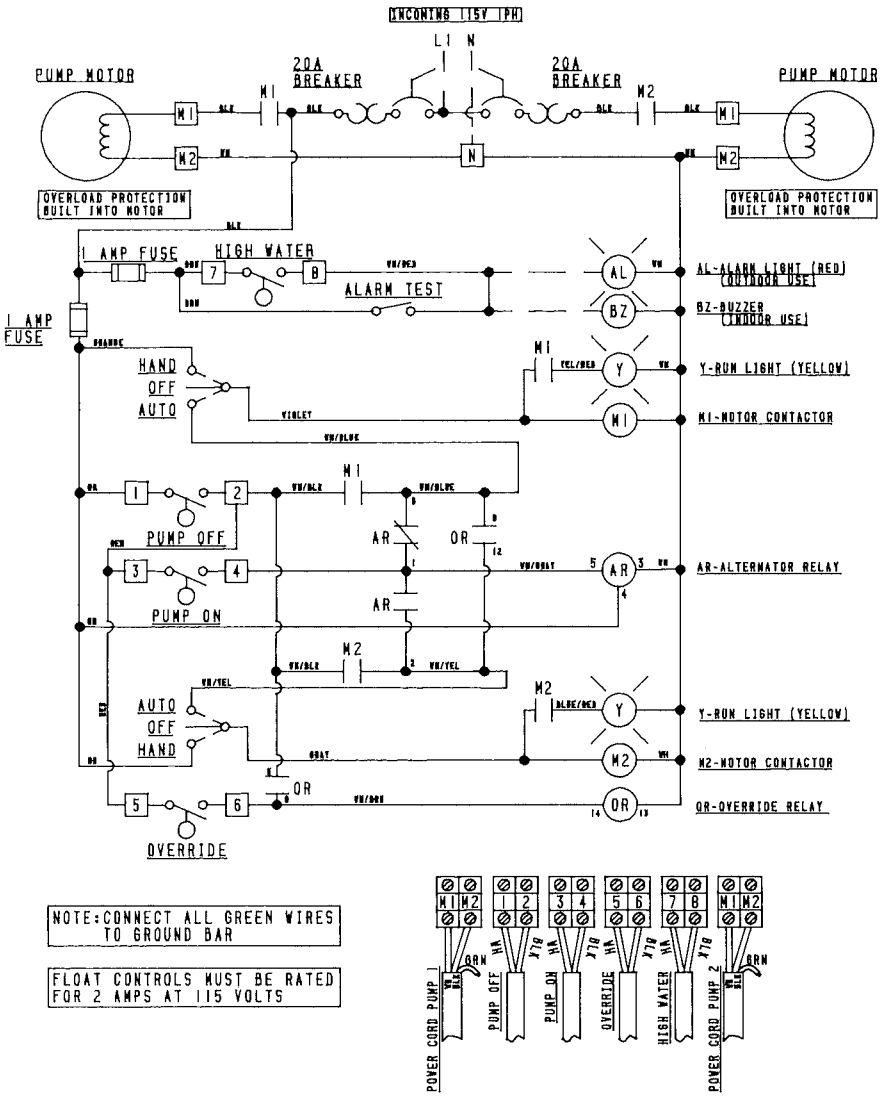

CAT. NO. CE-11D OR CE-11DW
115 VOLT, 1 PHASE

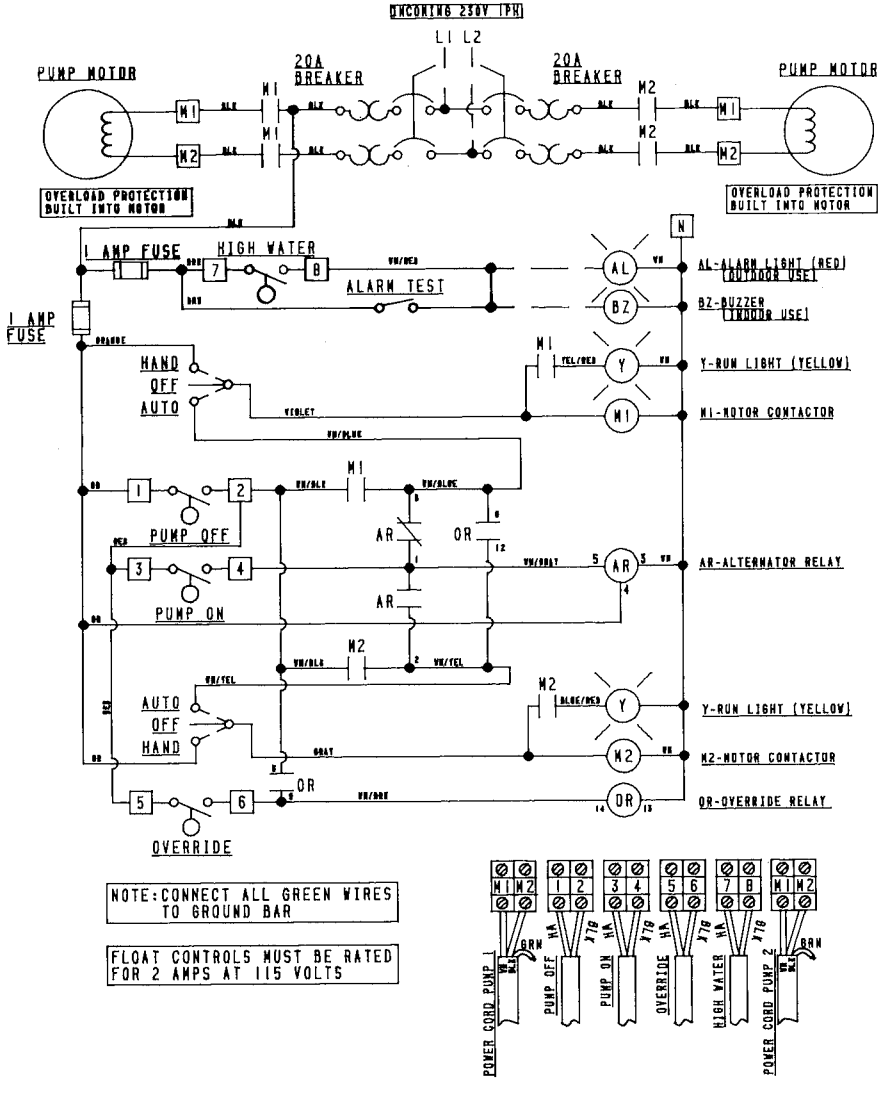

CAT. NO. CE-21D OR CE-21DW
230 VOLT, 1 PHASE

23833A149

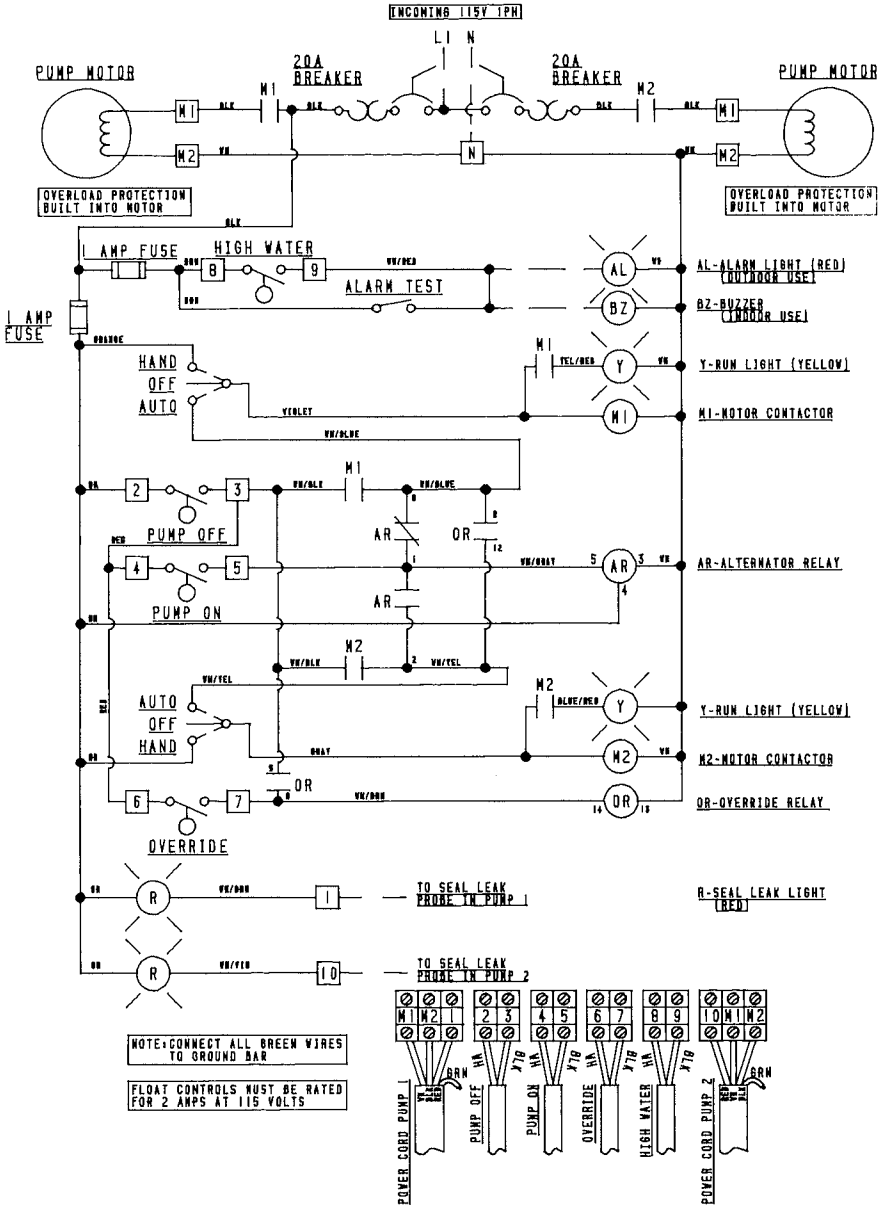

CAT. NO. CE(DS)-11D OR CE(DS)-11DW
115 VOLT, 1 PHASE

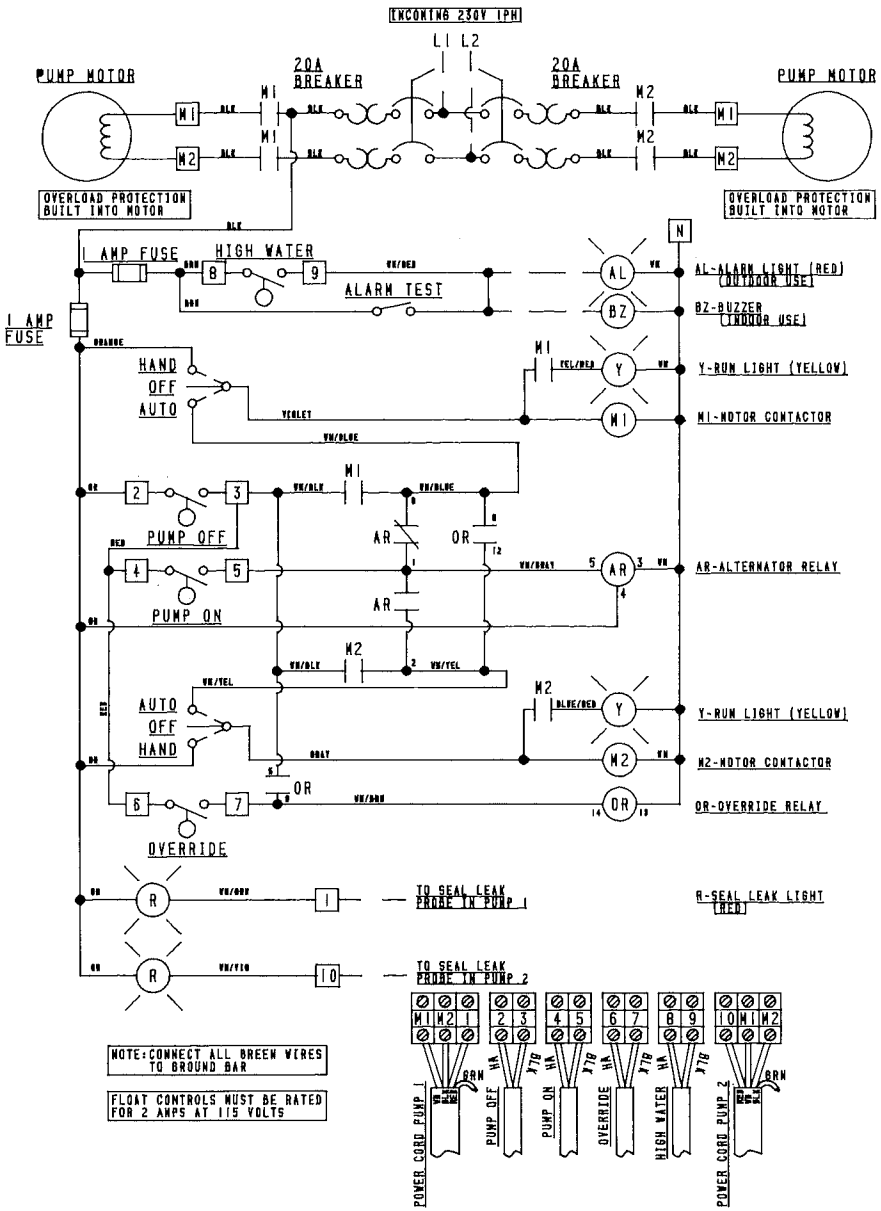

CAT. NO. CE(DS)-21D OR CE(DS)-21DW
230 VOLT, 1 PHASE

23833A149

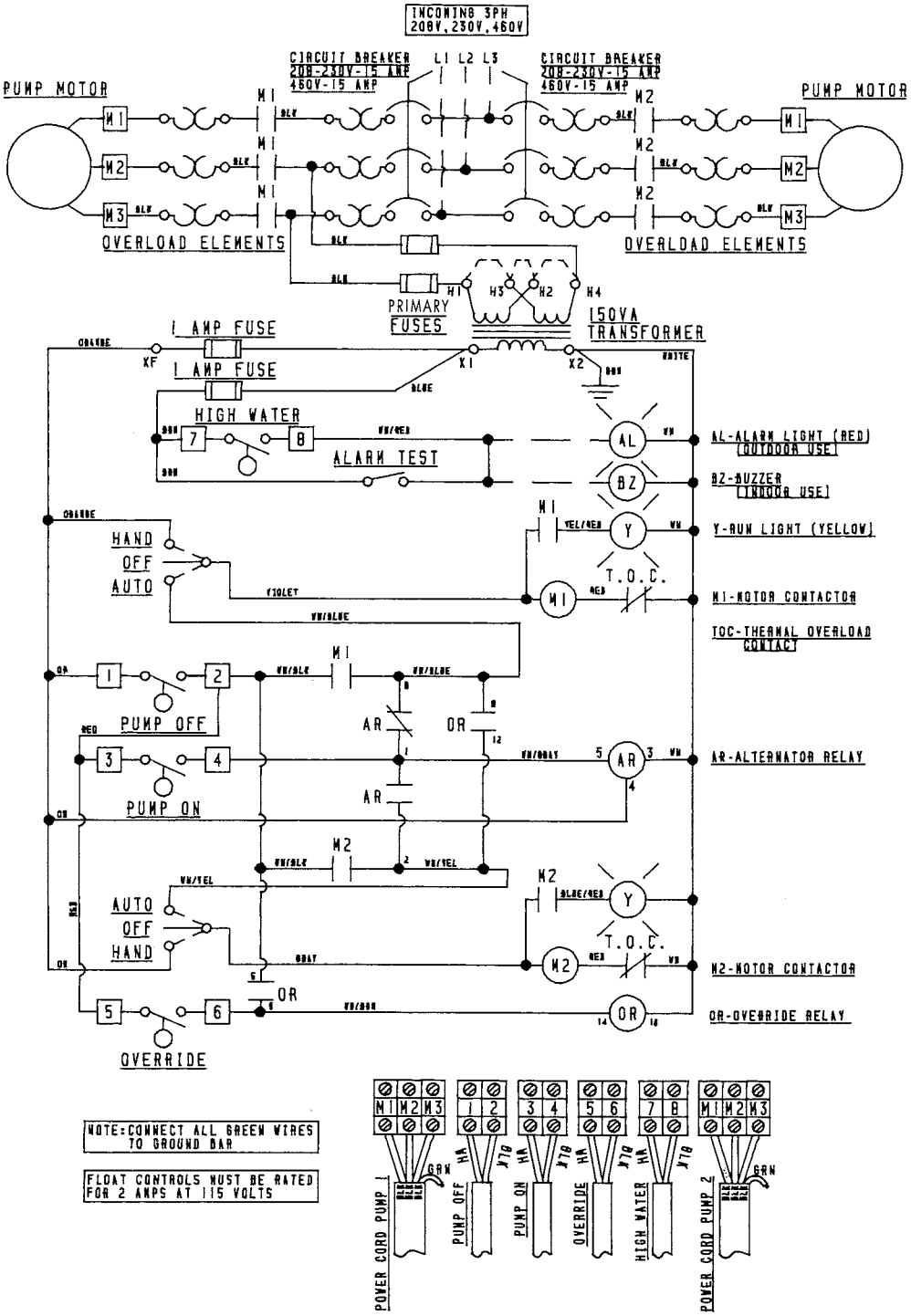

CAT. NO. CE-23D,CE-43D,CE-23DW OR CE-43DW
208,230 OR 460 VOLT, 3 PHASE

THIS PAGE INTENTIONALLY LEFT BLANK

STANDARD LIMITED WARRANTY

Pentair Myers® warrants its products against defects in material and workmanship for a period of 12 months from the date of shipment from Pentair Myers or 18 months from the manufacturing date, whichever occurs first – provided that such products are used in compliance with the requirements of the Pentair Myers catalog and technical manuals for use in pumping raw sewage, municipal wastewater or similar, abrasive-free, noncorrosive liquids.

During the warranty period and subject to the conditions set forth, Pentair Myers, at its discretion, will repair or replace to the original user, the parts that prove defective in materials and workmanship. Pentair Myers reserves the right to change or improve its products or any portions thereof without being obligated to provide such a change or improvement for prior sold and/or shipped units.

Start-up reports and electrical schematics may be required to support warranty claims. Submit at the time of start-up through the Pentair Myers website: http://forms.pentairliterature.com/startupform/startupform.asp?type=m. Warranty is effective only if Pentair Myers authorized control panels are used. All seal fail and heat sensing devices must be hooked up, functional and monitored or this warranty will be void. Pentair Myers will cover only the lower seal and labor thereof for all dual seal pumps. Under no circumstance will Pentair Myers be responsible for the cost of field labor, travel expenses, rented equipment, removal/reinstallation costs or freight expenses to and from the factory or an authorized Pentair Myers service facility.

This limited warranty will not apply: (a) to defects or malfunctions resulting from failure to properly install, operate or maintain the unit in accordance with the printed instructions provided; (b) to failures resulting from abuse, accident or negligence; (c) to normal maintenance services and parts used in connection with such service; (d) to units that are not installed in accordance with applicable local codes, ordinances and good trade practices; (e) if the unit is moved from its original installation location; (f) if unit is used for purposes other than for what it is designed and manufactured; (g) to any unit that has been repaired or altered by anyone other than Pentair Myers or an authorized Pentair Myers service provider; (h) to any unit that has been repaired using non factory specified/OEM parts.

Warranty Exclusions: PENTAIR MYERS MAKES NO EXPRESS OR IMPLIED WARRANTIES THAT EXTEND BEYOND THE DESCRIPTION ON THE FACE HEREOF. PENTAIR MYERS SPECIFICALLY DISCLAIMS THE IMPLIED WARRANTIES OF MERCHANTABILITY AND FITNESS FOR ANY PARTICULAR PURPOSE.

Liability Limitation: IN NO EVENT SHALL PENTAIR MYERS BE LIABLE OR RESPONSIBLE FOR CONSEQUENTIAL, INCIDENTAL OR SPECIAL DAMAGES RESULTING FROM OR RELATED IN ANY MANNER TO ANY PENTAIR MYERS PRODUCT OR PARTS THEREOF. PERSONAL INJURY AND/OR PROPERTY DAMAGE MAY RESULT FROM IMPROPER INSTALLATION. PENTAIR MYERS DISCLAIMS ALL LIABILITY, INCLUDING LIABILITY UNDER THIS WARRANTY, FOR IMPROPER INSTALLATION. PENTAIR MYERS RECOMMENDS INSTALLATION BY PROFESSIONALS.

Some states do not permit some or all of the above warranty limitations or the exclusion or limitation of incidental or consequential damages and therefore such limitations may not apply to you. No warranties or representations at any time made by any representatives of Pentair Myers shall vary or expand the provision hereof.

PENTAIR

MYERS®

1101 MYERS PARKWAY
ASHLAND, OHIO, USA 44805
419-289-1144

490 PINEBUSH ROAD, UNIT #4
CAMBRIDGE, ONTARIO, CANADA N1T 0A5
800-363-PUMP

WWW.FEMYERS.COM

Warranty Rev. 12/13