Technical Data – 1800 Series Split Case Pumps / Engineering Data
QUIET PUMP SELECTION

TABLE 9

PUMP SIZES			MAX. IMP. DIA.	CUT WATER DIA.	QUIET IMP. DIA.	SPHERE SIZE DIA.
2" 1813	2" 1823	2" 1843	9.0	10.4	8-13/16	1/8
2" 1814	2" 1824	2" 1844	9.5	10.3	8-11/16	1/4
2" 1815	2" 1825	2" 1845	12.0	13.3	11-1/4	1/4
2-1/2" 1813B	2-1/2" 1823B	2-1/2" 1843B	9.5	10.3	8-11/16	3/8
2-1/2" 1814	2-1/2" 1824	2-1/2" 1844	12.0	13.3	11-3/8	3/8
3" 1814B	3" 1824B	3" 1844B	10.0	10.5	8-13/16	1/2
3" 1815	3" 1825	3" 1845	14.0	15.4	13-1/16	5/8
4" 1812B	4" 1822B	4" 1842B	9.5	10.6	9-1/16	5/8
4" 1813A	4" 1823A	4" 1843A	11.3	12.8	10-7/8	5/8
4" 1813C	4" 1823C	4" 1843C	11.3	12.8	10-7/8	1/2
4" 1813D	4" 1823D	4" 1843D	11.0	12.8	10-7/8	3/8
4" 1814	4" 1824	4" 1844	15.0	16.4	13-15/16	5/8
4" 1815B	4" 1825B	4" 1845B	18.3	22.6	18-1/4	9/16
5" 1812A	5" 1822A	5" 1842A	11.0	12.6	10-3/4	1
5" 1812C	5" 1822C	5" 1842C	11.0	12.6	10-3/4	5/8
5" 1813	5" 1823	5" 1843	15.0	16.4	13-7/8	13/16
5" 1814	5" 1824	5" 1844	16.5	17.4	14-3/4	11/16
6" 1812	6" 1822	6" 1842	11.0	12.8	10-7/8	1
6" 1812HH	6" 1822HH	6" 1842HH	11.0	11.5	9-3/4	3/4
8" 1811B	8" 1821B	8" 1841B	12.0	13.3	11-1/4	1-1/4
6" 1813HH	6" 1823HH	6" 1843HH	14.0	14.25	12-1/8	11/16
6" 1813	6" 1823	6" 1843	15.0	16.6	14-1/8	15/16
6" 1814A	6" 1824A	6" 1844A	18.0	20.5	17-7/8	1
6" 1814B	6" 1824B	6" 1844B	18.0	20.5	17-7/8	1
6" 1814C	6" 1824C	6" 1844C	18.0	20.5	17-7/8	1
6" 1815	6" 1825	6" 1845	19.5	20.6	17-9/16	13/16
8" 1812	8" 1822	8" 1842	12.0	14.4	12-1/4	15/16
8" 1813A	8" 1823A	8" 1843A	15.0	16.8	14-1/4	15/16
8" 1813B	8" 1823B	8" 1843B	15.0	16.8	14-1/4	1-5/16
8" 1814B	8" 1824B	8" 1844B	17.5	18.5	15-3/4	1-5/16
10" 1812B	10" 1822B	10" 1842B	12.0	14.0	11-15/16	15/16
10" 1813B	10" 1823B	10" 1843B	15.0	17.1	14-9/16	1-7/16
10" 1813C	10" 1823C	10" 1843C	15.0	17.1	14-9/16	1-1/8
10" 1814	10" 1824	10" 1844	18.0	20.5	17-7/16	1-9/16
10" 1814D	10" 1824D	10" 1844D	17.5	18.5	15-3/4	1-5/16
–	8" 1826	–	24	21.6	18-3/8	1
12" 1813B	12" 1823B	12" 1843B	15.0	17.8	15	1-1/16
12" 1814A	12" 1824A	12" 1844A	18.0	21.1	18	1-5/16
14" 1814	14" 1824	14" 1844	18.0	22.0	18	1-1/2

TABLE 10

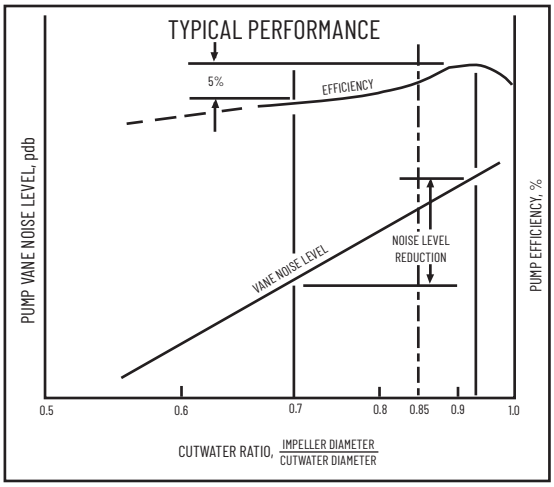

PENTAIR FAIRBANKS NIJHUIS®

QUIET PUMP SELECTION

QUIET PUMP operation is always desirable and sometimes essential. One of the most important factors for noise control in a pumping installation is the correct selection of a pumping unit for the system. To ensure that the pump will run quietly, it should be selected so that it will operate as close as possible to the best efficiency point. At this point the hydraulic shock within the pump is at a minimum since the flow angle of the fluid from the tip of the impeller is correct for the casing design. Every pump is designed for the best efficiency point, and operations at any other point on the characteristic curves is a compromise. The amount of turbulence on either side of the best efficiency point increases as the point of operation is moved along the curve from the maximum efficiency. Therefore, the greater the turbulence, the greater the noise generated.

Hydraulic shock is also a factor if the periphery of the impeller passes too close to the cutwater. If the ratio of the impeller diameter to the cutwater diameter in centrifugal pumps is greater than 0.92, the pump is likely to be hydraulically noisy. In such instances the hydraulic pulses are actually differential pressures that occur when the impeller vanes pass the cutwater. Cutwater ratios of 0.9 to 0.95 are typical; however, significantly lower noise levels are achieved in pumps designed with a ratio of 0.7 to 0.75. Although there is an optimum gap for pump efficiency, increases of only 3%–5% may be realized by using the optimum. A cutwater ratio of 0.85 is commonly specified by practicing engineers, thereby realizing a minimum reduction in pump efficiency with a mean reduction in noise level. Table 9 offers recommended quiet impeller diameter at 85% cutwater ratio.

BEARING LIFE is based on the radial and thrust loads imposed on the bearings at the specific operating head and suction pressure. The split case pump is designed for a six year minimum B_{10} life at the maximum recommended loads. Bearing life at any other point of greater capacity on the curves will greatly exceed the minimum life shown. Average bearing life is equal to five times the minimum bearing life. Tables 11, 12, 13, and 14 will enable you to determine the minimum radial and thrust bearing life for any type 1800 Series pump size.

SHAFT DEFLECTION is the consequence of the unbalanced hydraulic force acting inside the pump on the impeller and shaft in a radial direction. This unbalance occurs when the pump is operating away from its best efficiency point. At shutoff condition (zero flow) the unbalance is greatest and therefore the resultant radial load is maximum. Radial load and shaft deflection approach zero at the best efficiency point of the pump. 1800 Series pumps are designed for a maximum deflection of .002" at the mechanical seal faces when operating at the maximum recommended differential pressure. Deflection in a twin volute pump is minimized by a splitter blade that is cast within the casing thereby nearly balancing the resultant forces acting on the shaft. See Table 13.

PROCEDURE FOR DETERMINING MAXIMUM SHAFT DEFLECTION AND MINIMUM BEARING LIFE.

1. Determine the proper pump size, approximate shutoff head in feet, power series number, and speed from the range charts illustrated in the 1800 bulletin.
2. From Table 11 determine the pump size factor based on pump size and RPM.
3. On Table 13 locate the correct shutoff head in feet and read across to the proper pump size factor and down to the applicable power series. Note the load factor in the process. Read to the scale on the left for the maximum shaft deflection value.
4. From Table 14 using the load factor from step 3 above, read across to the correct power series number and down for the minimum bearing life in hours.

NOTE:

1. One year life is based on 8740 hours (continuous operation).
2. Additional bearing information can be found on page 109.
3. Specific information on bearing life and shaft deflection can be obtained from the factory.

November © 2018 Pentair plc

Technical Data – 1800 Series Split Case Pumps / Engineering Data
SHAFT DEFLECTION AND BEARING LIFE

TABLE 11

PUMP SIZES			POWER SERIES	PUMP SIZE FACTOR		
				3500 RPM	1750 RPM	1150 RPM
2" 1813	2" 1823	2" 1843	1	0.40	0.50	
2" 1814	2" 1824	2" 1844	1	0.55	0.65	
2" 1815	2" 1825	2" 1845	1	0.65	0.80	
2-1/2" 1813B	2-1/2" 1823B	2-1/2" 1843B	2	1.00	1.00	
2-1/2" 1814	2-1/2" 1824	2-1/2" 1844	2		1.00	1.20
3" 1814B	3" 1824B	3" 1844B	2	1.25	1.50	
3" 1815	3" 1825	3" 1845	2		1.40	1.60
4" 1812B	4" 1822B	4" 1842B	2	1.30	1.40	
4" 1813A	4" 1823A	4" 1843A	3		2.00	2.25
4" 1813C	4" 1823C	4" 1843C	3	1.50	1.70	
4" 1813D	4" 1823D	4" 1843D	3	1.85	4.00	
4" 1814	4" 1824	4" 1844	3		2.00	2.25
4" 1815B	4" 1825B	4" 1845B	4		1.70	1.80
5" 1812A	5" 1822A	5" 1842A	4		4.00	4.50
5" 1812C	5" 1822C	5" 1842C	4	2.00	2.13	
5" 1813	5" 1823	5" 1843	4		3.00	3.25
5" 1814	5" 1824	5" 1844	4		3.00	3.25
6" 1812	6" 1822	6" 1842	4		4.00	4.50
8" 1811B	8" 1821B	8" 1841B	4		5.25	5.50
6" 1813	6" 1823	6" 1843	5		3.75	4.00
6" 1814A	6" 1824A	6" 1844A	5		3.00	3.25
6" 1814B	6" 1824B	6" 1844B	5		2.75	3.50
6" 1814C	6" 1824C	6" 1844C	5		3.75	4.75
6" 1815	6" 1825	6" 1845	5		3.20	3.40
8" 1812	8" 1822	8" 1842	5		3.50	4.00
8" 1813A	8" 1823A	8" 1843A	5		4.00	4.50
8" 1813B	8" 1823B	8" 1843B	5		4.50	5.00
8" 1814B	8" 1824B	8" 1844B	5		4.00	5.00
PUMP SIZES			POWER SERIES	PUMP SIZE FACTOR		
				1775 RPM	1175 RPM	885 RPM
10" 1812B	10" 1822B	10" 1842B	6B	4.50	5.00	
10" 1813B	10" 1823B	10" 1843B	6B	3.25	3.75	
10" 1813C	10" 1823C	10" 1843C	6B	3.50	4.75	
10" 1814	10" 1824	10" 1844	6B	3.25	3.75	
–	8" 1826	–	7	4.50		
12" 1813B	12" 1823B	12" 1843B	7	4.75	5.50	
12" 1814A	12" 1824A	12" 1844A	7	4.00	4.50	
14" 1814	14" 1824	14" 1844	7		7.00	7.50

EXAMPLE: A 5" 1813, 5" 1823 or 5" 1843 pump operating at 1750 RPM. On a No. 4 power series with a shut-off head of 225 ft. TDH has a size factor of 3.00, a load factor of 3.35, a maximum shaft deflection at the centerline of the impeller of .0092, and a minimum bearing life of 97,000 hours @ 1750 RPM.

TABLE 12

	CHART SPEED RPM	DESIRED SPEED RPM	MULTIPLY CHART LIFE BY
SPEED (RPM) FACTORS	3500	1750	2
	3500	1150	3
	1750	1150	1.5
	1775	1175	1.5
	1775	875	2
	1175	875	1.3

TABLE 13 & 14

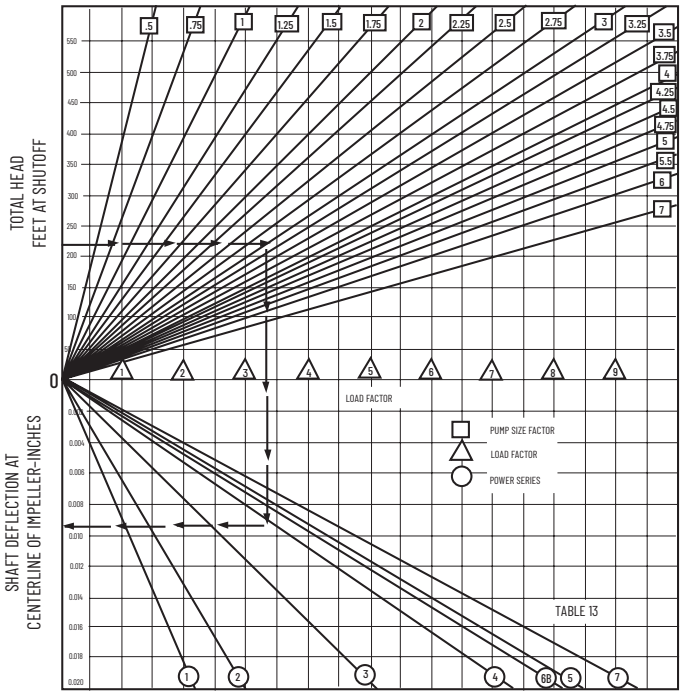

The charts reflect the worst possible conditions at pump shutoff. The effect from impeller, shaft sleeves, wearing rings, and packing will reduce the amount of *deflection.*

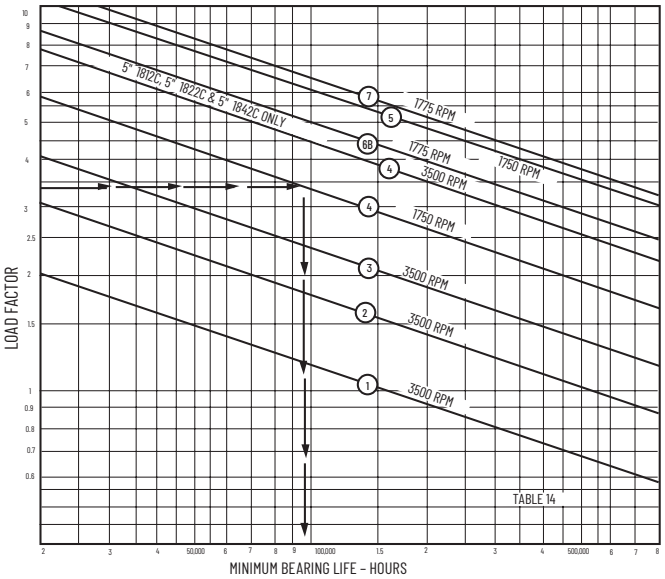

PENTAIR FAIRBANKS NIJHUIS®

Technical Data – 1800 Series Split Case Pumps / Engineering Data

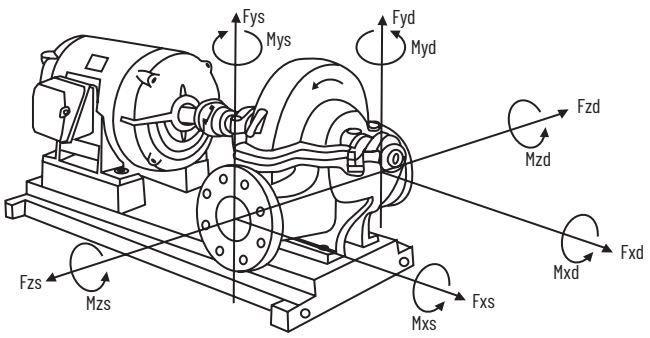

PUMP SIZES		FORCES-LBS.			MOMENTS-FT.LBS.		
		Fx	Fy	Fz	Mx	My	Mz
2" 1823	DISCHARGE	200	250	750	250	350	300
	SUCTION	200	250	750	250	350	300
2" 1824	DISCHARGE	200	250	750	250	350	300
	SUCTION	200	250	750	250	350	300
2" 1825	DISCHARGE	200	250	750	250	350	300
	SUCTION	200	200	750	250	350	300
2-1/2" 1823B	DISCHARGE	500	550	1350	600	800	700
	SUCTION	450	550	1350	600	800	700
2-1/2" 1824	DISCHARGE	400	500	1350	600	800	700
	SUCTION	400	500	1350	600	800	700
3" 1824B	DISCHARGE	450	550	1350	600	800	700
	SUCTION	400	500	1350	600	800	700
3" 1825	DISCHARGE	400	450	1400	600	800	700
	SUCTION	350	400	1400	600	800	700
4" 1822B	DISCHARGE	450	550	1400	650	800	700
	SUCTION	400	500	1400	650	800	700
4" 1823A	DISCHARGE	250	850	750	1200	550	1400
	SUCTION	250	850	750	1200	550	1400
4" 1824	DISCHARGE	700	850	2200	1200	1600	1450
	SUCTION	650	750	2200	1200	1600	1450
4" 1825B	DISCHARGE	650	800	2200	1250	1600	1450
	SUCTION	550	700	2200	1250	1600	1450
5" 1822A	DISCHARGE	800	400	2200	500	1600	600
	SUCTION	700	350	2200	500	1600	600
5" 1823	DISCHARGE	700	850	2200	1250	1600	1450
	SUCTION	600	750	2200	1250	1600	1450
5" 1824	DISCHARGE	650	800	2250	1250	1600	1500
	SUCTION	600	750	2250	1250	1600	1500
6" 1822	DISCHARGE	800	950	2200	1250	1600	1450
	SUCTION	650	750	2200	1250	1600	1450
6" 1822HH	DISCHARGE	1150	1300	3250	2100	2800	2550
	SUCTION	950	1100	3250	2100	2800	2550
8" 1821B	DISCHARGE	750	750	2250	1000	1600	1200
	SUCTION	650	600	2250	1000	1600	1200

Values tabled are for forces and moments acting alone at the suction or discharge flange.
Combined forces and moments must be reduced so:

$$\frac{Fxd}{Fxdmax} + \frac{Fyd}{Fydmax} + \frac{Fzd}{Fzdmax} + \frac{Mxd}{Mxdmax} + \frac{Myd}{Mydmax} + \frac{Mzd}{Mzdmax} + \frac{Fxs}{Fxsmax} + \frac{Fys}{Fysmax} + \frac{Fzs}{Fzsmax} + \frac{Mxs}{Fzsmac} + \frac{Mys}{Mysmac} + \frac{Mzs}{Mzsmax} \leq 1.0$$

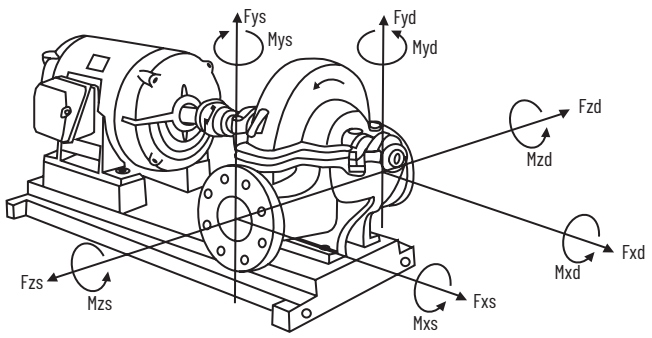

PUMP SIZES		FORCES-LBS.			MOMENTS-FT.LBS.		
		Fx	Fy	Fz	Mx	My	Mz
6" 1823HH	DISCHARGE	1150	1300	3250	2100	2800	2550
	SUCTION	950	1100	3250	2100	2800	2550
6" 1823	DISCHARGE	1150	1300	3250	2100	2800	2550
	SUCTION	950	1100	3250	2100	2800	2550
6" 1824A	DISCHARGE	1000	1200	3300	2150	2850	2600
	SUCTION	900	1050	3300	2150	2850	2600
6" 1825	DISCHARGE	1050	1250	3300	2200	2850	2650
	SUCTION	900	1100	3300	2200	2850	2650
8" 1822	DISCHARGE	950	1150	3300	2150	2850	2600
	SUCTION	900	1100	3300	2150	2850	2600
8" 1823A	DISCHARGE	950	1150	3300	2200	2850	2600
	SUCTION	900	1100	3300	2200	2850	2600
8" 1824B	DISCHARGE	950	1150	3300	2200	2850	2650
	SUCTION	900	1100	3300	2200	2850	2650
8" 1825	DISCHARGE	1650	2000	3300	4000	4350	3350
	SUCTION	1400	1700	3350	4000	4350	3350
10" 1822B	DISCHARGE	1350	1700	3350	3000	4450	4650
	SUCTION	1150	1400	3350	3000	4450	4650
10" 1823B	DISCHARGE	1300	1600	3400	3050	4500	4700
	SUCTION	1100	1350	3400	3050	4500	4700
10" 1823C	DISCHARGE	1300	1600	3400	3050	4500	4700
	SUCTION	1100	1350	3400	3050	4500	4700
10" 1824	DISCHARGE	1200	1500	3400	3050	4500	4700
	SUCTION	1000	1250	3400	3050	4500	4700
10" 1824D	DISCHARGE	1200	1500	3400	3050	4500	4700
	SUCTION	1000	1250	3400	3250	4500	4700
8" 1826	DISCHARGE	1075	1325	3350	2625	3850	3675
	SUCTION	950	1175	3350	2625	3850	3675
12" 1823B	DISCHARGE	1300	1700	3450	3250	4600	5050
	SUCTION	1000	1300	3450	3250	4600	5050
12" 1824A	DISCHARGE	1250	1650	3500	3300	4650	5100
	SUCTION	950	1250	3500	3300	4650	5100
14" 1824	DISCHARGE	1050	1450	3600	3550	4800	5500
	SUCTION	850	1150	3600	3550	4800	5500

Values tabled are for forces and moments acting alone at the suction or discharge flange.
Combined forces and moments must be reduced so:

$$\frac{Fxd}{Fxdmax} + \frac{Fyd}{Fydmax} + \frac{Fxd}{Fzdmax} + \frac{Mxd}{Mxdmax} + \frac{Myd}{Mydmax} + \frac{Mzd}{Mzdmax} + \frac{Fxs}{Fxsmax} + \frac{Fys}{Fysmax} + \frac{Fzs}{Fzsmac} + \frac{Mxs}{Mxsmax} + \frac{Mys}{Mysmac} + \frac{Mzs}{Mzsmax} \leq 1.0$$

 © 2018 Pentair plc